Kelley Drye & Warren LLP
Washington Harbour, Suite 400
3050 K Street, NW
Washington, DC 20007

August 15, 2022

Via Regulations.gov

U.S. Environmental Protection Agency
EPA Docket Center
Docket ID No. EPA–HQ–OAR–2002–0049
1200 Pennsylvania Avenue, N.W.
Washington, D.C. 20460

Re: EPA Docket ID No. EPA–HQ–OAR–2002–0049; Comments from the American Iron and Steel Institute, the Steel Manufacturers Association, and the Specialty Steel Industry of North America on EPA's Proposed "Standards of Performance for Steel Plants: Electric Arc Furnaces Constructed After 10/21/74 & On or Before 8/17/83; Standards of Performance for Steel Plants: Electric Arc Furnaces & Argon-Oxygen Decarburization Constructed After 8/17/83"

Dear U.S. Environmental Protection Agency:

On behalf of the American Iron and Steel Institute ("AISI"), the Steel Manufacturers Association ("SMA"), and the Specialty Steel Industry of North America ("SSINA") (collectively, "the Steel Associations"),[1] we respectfully submit these comments regarding the U.S. Environmental Protection Agency's ("EPA's" or "the Agency's") proposed new and revised New Source Performance Standards ("NSPS") for electric arc furnace ("EAF") steel manufacturing ("NSPS Revisions").[2]

As explained in the detailed comments that follow, EPA proposes not only new standards applicable to "new," "modified", or "reconstructed" sources after the date of the proposal (to be codified at 40 C.F.R. Part 60 Subpart AAb), but also fundamental revisions to the existing NSPS that EAF steel mills have been complying with for years, if not decades (40 C.F.R. Part 60 Subparts AA and AAa). We appreciate that EPA was open to industry feedback during development of the proposed NSPS Revisions and willing to adopt certain helpful clarifications to the standards. However, for the reasons discussed below, numerous elements of the newly proposed Subpart AAb and many of the revisions to Subparts AA and AAa are unjustified, unsupported by data or the rulemaking record, and exceed EPA's authority under the Clean Air Act ("CAA").

In particular, the proposed NSPS Revisions are flawed in the following crucial respects:

[1] Together, AISI, SMA and SSINA represent nearly 100 percent of EAF steel manufacturing in the United States.

[2] 87 Fed. Reg. 29,710 (May 16, 2022).

- The proposed Subpart AAb zero percent shop opacity limit, in addition to being impractical and unnecessary, does not reflect the "best system of emission reduction … adequately demonstrated" ("BSER") and is based on a limited data set that is not representative of long-term compliance performance. Nearly all of EPA's supporting data come from specific individual facility performance tests, the limited duration of which fail to account for short-term variations in operations or atmospheric conditions that render continuous compliance with a zero percent opacity standard at all times wholly unrealistic for even the most modern and well-controlled sources. Moreover, all of the facilities that EPA identified as supporting a zero percent shop opacity standard either have other performance test or Method 9 data showing numerous instances of non-zero opacity, or the record lacks data from these facilities showing non-zero opacity readings during charging and tapping.

  In addition, a zero percent shop opacity standard is impractical and unnecessary. Opacity is a surrogate measure for assessing, indirectly, the aim of reducing PM emissions. However, EPA has not properly shown that reducing shop opacity from the current six percent limit to the proposed zero percent results in material PM reductions.

- The proposed zero percent shop opacity limit also ignores that more than half of the facilities in its data set were unable to achieve 0.000 percent shop opacity even during the short duration of the performance test. In addition, EPA does not acknowledge that, during each of the performance tests, opacity measurements were recorded during the melting and refining mode of EAF operation. Yet, EPA attempts to regulate the charging and tapping modes based on these tests. This is relevant because EPA believes that the charging and tapping furnace modes are more likely to generate fugitive emissions than the melting and refining modes (as evidenced by the fact that existing Subpart AA specifies charging and tapping shop opacity limits of 20 percent and 40 percent, respectively).

- Even if EPA's data set could be credibly construed as demonstrating that EAF producers could consistently maintain long-term compliance with a zero percent shop opacity standard (which the data do not support), the Agency has no rational basis to propose that new canopy hooding is a system of emission reduction that would allow companies to reliably and consistently achieve this unprecedented (and unnecessary) standard. EPA does not know whether canopy hoods were used by the sources in its data set to achieve zero percent shop opacity during performance tests, or if the lack of such hoods contributed to the majority of sources' inability to achieve zero percent shop opacity. EPA did not analyze whether other emissions capture systems or fugitive control strategies were employed by facilities that achieved zero percent shop opacity during performance tests (or, conversely, whether canopy hoods were used by the facilities that EPA identified as not achieving zero percent shop opacity). EPA simply relies on a 1983 Agency background document that suggests that canopies (when used with other technologies) are able to increase emissions capture by 90 percent. EPA ignores that the Agency relied on this document in the 1984 NSPS revision in which EPA adopted a 6 percent shop opacity limit, and that many sources cannot use such canopies due to interference with the movement of

overhead gantry cranes. Moreover, in this proposed rulemaking, EPA disregards more current evidence of *lower* capture efficiency from the ferroalloy industry that EPA uses elsewhere as its basis to assess the cost effectiveness of canopies. EPA also did not analyze whether achieving (or not achieving) zero percent shop opacity during performance tests is attributable to "measurement" of opacity by human observers using EPA Method 9.

Even if EPA had a reasonable basis to assume canopies could be broadly utilized in the EAF steel sector and can achieve 90 percent capture efficiency, EPA never explains how the capability of achieving a 90 percent "guesstimated" emission capture efficiency adequately demonstrates that sources could reliably and consistently achieve long-term compliance with a zero percent shop opacity limit. In fact, not surprisingly, EPA's own data review reflects no discernable correlation between higher baghouse particulate emissions and consequent lower shop opacity measurements.

- EPA completely ignores non-air quality health impacts of the proposed zero percent shop opacity limit, including heat and reduced visibility within the melt shop, that were *outcome-determinative* in the prior revision of the EAF steel NSPS standard (Subpart AAa).

- Given still unresolved and outstanding questions about the accuracy and reliability of optical devices for measuring fugitive emissions at levels as low as the existing and proposed EAF NSPS, especially based on site-specific factors, it is inappropriate to specify the digital camera opacity technique ("DCOT") as an industry-wide alternative compliance measurement option. DCOT is not an appropriate or recognized robust monitoring method for low level opacity under all conditions, based on EPA's own formal admission that they have error bands that are too wide and therefore inappropriate for measuring opacity below 10 percent. In addition, the only industry currently required by regulation to use DCOT (Ferroalloys Production) received permission from EPA to use an alternative method – specifically, Method 9 – because of numerous issues with the DCOT method and provider.

- The proposed Subpart AAb "Facility-Wide" (pounds per ton) particulate matter ("PM") limit is based on a speculative Agency analysis that EPA cannot reasonably correlate to the existing concentration-based standard. EPA's justification is inconsistent with the Agency's NSPS regulations and with the manner in which facilities actually operate meltshop pollution controls. The proposed change fails to account for production variability and would unnecessarily complicate compliance – all for no material environmental benefit.

- EPA misleadingly characterizes – and fails to provide any explanation for – fundamental revisions to the existing NSPS standards (Subparts AA and AAa) as "minor" and "editorial and clarifying changes."[3] On the contrary, the proposed revisions constitute significant changes to the current standard. For instance, requiring compliance with shop opacity

[3] 87 Fed. Reg. at 29,721 and 29,726.

limits during "charging and tapping" rather than "melting and refining" is a major change with no underlying rationale. In addition, requiring the installation, calibration, and maintenance of multiple types of operational monitoring systems (40 C.F.R. § 60.264, § 60.264a) instead of utilizing one such mechanism as currently required is another significant change. Both changes are far from "minor" and are not simply "editorial and clarifying." In fact, they would require substantial additional modifications to the meltshop facility and furnace operations. Moreover, such retroactive changes to the long-standing compliance standards are at odds with the mandate of the NSPS program to establish standards of performance based on "the best system of emission reduction … adequately demonstrated" and to apply those standards "to facilities that begin construction, reconstruction, or modification after the date of publication of the proposed standards."[4] Further, by failing to explain the proposed changes, EPA violates a basic tenant of rulemaking that a rule is arbitrary and capricious if there is a lack of a reasonable explanation.

- EPA fails to justify, and lacks data to support, the proposal to measure compliance with shop opacity limits (for all Subparts) during charging and tapping. EPA's database from currently operating EAF mills consists predominantly of data collected during the "melting and refining" modes of the EAF steelmaking heat cycle with little other than incidental data that may have been collected from the brief charging and tapping portions of the heat cycles observed during performance tests. The little data available in the record from the 1983 Subpart AAa rulemaking is insufficient to justify changing the existing standard almost 40 years later and is not representative of current melt shop operations.

- The proposed revisions to the Operational Monitoring requirements of Subparts AA/AAa (*i.e.,* removing the optional nature of several current monitoring requirements and instead requiring all of them), and the inclusion of those revisions in Subpart AAb, are not based on any reasoned analysis and ignore basic logistical challenges to operating and maintaining devices (such as continuous furnace pressure monitors) under very harsh conditions. The existing standards recognize that there are multiple ways to monitor the efficacy of the emission control system, each of which may be appropriate to a company's particular furnace, meltshop, and capture and control technology configurations. Nothing in the record supports the notion that all EAF mills can or should be required to demonstrate compliance through continuous and simultaneous monitoring of all of the performance measuring alternatives. EPA should rescind the proposed changes to the operational monitoring provisions and restore the existing alternative methods of compliance monitoring, including the option to record fans amps and damper positions on a once per shift basis and the ability to perform visible emissions ("VE") observations in lieu of furnace static pressure monitoring. Due to the harsh furnace environment, furnace static pressure monitoring is infeasible at many facilities and practically impossible at any EAF

[4] 87 Fed. Reg. at 29,714.

facility on a *continuous* basis. Those facilities that currently do such monitoring have great difficulty maintaining the devices and could not rely on the gauges on a continuous basis.

- While recognizing the need to maintain the meltshop building in good condition, EPA proposes (for all Subparts) an inappropriate and vague requirement to "ensure that the building does not have any holes or other openings for particulate matter laden air to escape." For Subparts AA and AAa, such a requirement conflicts with the existing shop opacity limits and seemingly imposes a *de facto* zero percent fugitive emissions requirement that seeks to make the entire melt shop total enclosure. For all existing and proposed Subparts, EPA's proposal ignores that, while meltshops help constrain and contain the dispersion of particulate emissions from the EAF so they can be captured or fall out within the structure, meltshops do not, and cannot, fully enclose the EAF or other emissions sources contained within them. Meltshops are very large. Although every meltshop is different, all require multiple large doors and bays to move heavy equipment and materials in and out. They also intentionally provide for the introduction of outside air necessary for efficient combustion. Perhaps most importantly, the proposal fails to address workplace health and air quality concerns. Natural ventilation and air-flow through the meltshop, as well as through doors and other openings, are critical to maintaining a healthy workplace.

  Further, enforcement of the standard would be based on a highly subjective determination that potentially could result in EPA requiring a facility to close any opening that "materially impact[s] the efficacy of the capture system" (the term "materially" being particularly open-ended and subject to the whims of an individual EPA inspector). In lieu of the proposed building inspection requirement, we recommend rescinding the provision as unnecessary due to the fact that facilities are required to meet the shop opacity limits regardless of the condition of the meltshop. If the Agency nonetheless insists on a building inspection requirement, then, at minimum, EPA must establish a less subjective standard, including defining what qualifies as a "material" hole or other opening in the meltshop.

- EPA implausibly presumes that sources subject to Subparts AA and AAa will incur zero costs from the Agency's proposed changes to those Subparts. For proposed Subpart AAb, EPA inexplicably presumes that all new, modified, and reconstructed facilities will be able to comply with the proposed zero percent shop opacity standard by installing a partial roof canopy at an unrealistically modest cost. Even accepting all of EPA's various unsupported cost assumptions, the actual PM reductions EPA attributes to the zero percent shop opacity proposal will cost between $50,000 and $514,000 per ton. Likewise, EPA's analysis of its production-based PM standard is so erroneous and deficient on its face that it does not allow a reasonable basis for comments on the specific costs EPA associates with that aspect of the proposal.

- In responding to bag leak detection system ("BLDS") alarms, EPA should adopt a 24-hour timeframe to initiate a response, and require that response actions be completed as soon as

practicable in order to provide for flexibility to address very diverse operations and to recognize the practical realities in identifying and responding to BLDS alarms. This approach is the same as that used in the Integrated Iron and Steel national emission standard for hazardous air pollutants ("IIS NESHAP"), and also is consistent with other NSPS standards.

- EPA proposes to eliminate the startup, shutdown and malfunction ("SSM") exemption without otherwise accounting for foreseeable "malfunction" events that can and will occur, and which are beyond the control of the owner or operator and are therefore not reasonably preventable. SSM provisions should remain in the revised NSPS standards unless compliance with limits is demonstrated to be achievable through start-up, shut down, and malfunction periods. EPA also has discretion to adopt a work practice standard under CAA Section 111(h) to address periods of malfunction. In addition, in exercising its court-sanctioned enforcement discretion, EPA may identify factors that should be considered in evaluating potential non-compliance with emission limits due to malfunction events.

These and other issues are explained in the following detailed comments of the Steel Associations.

The Steel Associations appreciate the opportunity to provide these comments. We look forward to engaging cooperatively with EPA to develop appropriate revisions to the NSPS for EAF steel mills. If you have any questions about these comments or would like to discuss them with the Steel Associations, please do not hesitate to contact the representatives identified below.

Respectfully submitted,

Paul Balserak
Vice President, Environment
American Iron and Steel Institute
25 Massachusetts Ave. NW, Suite 800
Washington, DC 20001
202.452.7122
pbalserak@steel.org

Eric Stuart
Vice President, Environment & Sustainability
Steel Manufacturers Association
1150 Connecticut Ave., NW, Suite 1125
Washington, DC 20036
202.296.1515
stuart@steelnet.org

Joseph J. Green
Counsel
The Specialty Steel Industry of North America
3050 K Street, N.W., Suite 400
202.342.8849
jgreen@kelleydrye.com

DETAILED COMMENTS FROM THE AMERICAN IRON AND STEEL INSTITUTE, THE STEEL MANUFACTURERS ASSOCIATION, AND THE SPECIALTY STEEL INDUSTRY OF NORTH AMERICA (THE "STEEL ASSOCIATIONS")

PROPOSED "Standards of Performance for Steel Plants: Electric Arc Furnaces Constructed After 10/21/74 & On or Before 8/17/83; Standards of Performance for Steel Plants: Electric Arc Furnaces & Argon-Oxygen Decarburization Constructed After 8/17/83"

DOCKET NO. EPA–HQ–OAR–2002–0049

August 15, 2022

TABLE OF CONTENTS

Page

I. LEGAL BACKGROUND AND THRESHOLD ISSUES 12

A. WHAT IS BSER 12

1. BSER and Achievability 13

2. Costs 14

3. Energy and Other Non-Air Quality Impacts 16

4. NSPS Revisions 16

5. Factual and Analytical Requirements for NSPS Revisions 17

B. NSPS REVISIONS DO NOT ALLOW FOR RETROACTIVE IMPOSITION OF MORE STRINGENT STANDARDS ON FACILITIES THAT ARE NOT NEW, MODIFIED OR RECONSTRUCTED AFTER THE DATE OF PROPOSED NSPS REVISIONS 18

II. THE PROPOSED ZERO PERCENT SHOP OPACITY LIMIT IS NOT BSER.....23

A. The Proposed Zero Percent Shop Opacity Limit Is Not Adequately Demonstrated BSER 24

1. EPA's proposal is based on a limited subset of data that is not indicative of continuous long-term performance 24

2. Shop opacity data in the record are not representative of performance during "charging and tapping" 26

3. EPA Relies Particularly on One Mill that is Not Representative of the Industry 27

4. Zero percent opacity (combined with requirement for no holes or opening in the melt shop) is a surrogate for total building enclosure, which is not viable, necessary, or safe for workers.....28

B. EPA Should Clarify the Calculation for Zero Percent Opacity Under Method 9.....30

C. Method 22 is an Inappropriate Method for Measuring Compliance with the Shop Opacity Limit 32

D. The Digital Camera Opacity Technique ("DCOT") is Inappropriate as a Compliance Measurement Option.....32

III. THE PROPOSED "FACILITY-WIDE" PM LIMIT IS BASED ON SPECULATION, NOT SUPPORTED BY ANY REASONED ANALYSIS, AND UNNECESSARILY COMPLICATIONS COMPLIANCE.....37

A. EPA'S Proposed Production-Based Limit Cannot Be Correlated with the Existing Concentration-Based Limit.....39

B. EPA's Proposed Approach Ignores the Differences Among EAF Steel Mills that the Agency Previously Recognized.....44

IV. EPA ILLEGALLY PROPOSES TO IMPOSE RETROACTIVELY NEW NSPS COMPLIANCE STANDARDS ON FACILITIES THAT ARE NOT NEWLY CONSTRUCTED, RECONSTRUCTED, OR MODIFIED AFTER THE DATE OF THE PROPOSAL.....48

A. Requiring Measurement of Shop Opacity During "Charging and Tapping" Is a Fundamental Change to the Stringency of the Standard.....49

B. Mandating Adoption of New Operational Monitoring Requirements that Have Been Optional is an Increase in the Stringency of the Subpart AA/AAa Standards (And Are Unjustified for Subpart AAb).....51

C. EPA PROPOSES TO REVERSE PRIOR DETERMINATIONS AND IMPOSE BLDS ON ALL BAGHOUSES WITHOUT EXPLANATION OR JUSTIFICATION.....56

V. THE PROPOSED BUILDING INSPECTION REQUIREMENT IS VAGUE AND UNNECESSARY.....57

VI. EPA'S COST ASSUMPTIONS ARE MISGUIDED AND INCOMPLETE.....58

A. Cost Analysis for Proposed Subpart AAb.....59

1. EPA's Control Cost Assumptions are Baseless.....60

2. EPA's Estimates of the PM Associated with Shop Opacity are Unsupported and Improper.....64

3. EPA's Data Demonstrate that the Proposed Zero Percent Opacity Standard is Not Cost-Effective.....68

B. EPA Conducted No Cost Analysis for its Proposed Changes to Subparts AA and AAa .69

VII. CONSISTENT WITH OTHER INDUSTRY SECTORS, EAF STEEL FACILITIES SHOULD BE ALLOWED 24 HOURS TO RESPOND TO BLDS ALARMS AND TO COMPLETE THE RESPONSE AS SOON AS PRACTICABLE 70

VIII. OTHER ISSUES FOR COMMENT.....75

A. Existing NSPS Facilities Need to Be Afforded Ample Time to Comply with the New Requirements 75

B. The Definition of Charging Period Should Be Modified.....75

C. EPA Must Provide Guidance on Compliance during Malfunction Events as Part of the NSPS Regulations 75

D. EPA's Inclusion of the Definition of Modification in the Applicability Sections is Unnecessary and Potentially Contradictory 78

IX. CONCLUSION.....79

I. LEGAL BACKGROUND AND THRESHOLD ISSUES

A. WHAT IS BSER

As with EPA's initial promulgation of the NSPS, the Agency's review is guided by the CAA's definition of a "standard of performance." Under the CAA, this phrase means:

> a standard for emissions of air pollutants which reflects the degree of emission limitation achievable through the application of the best system of emission reduction ["BSER"] which (taking into account the cost of achieving such reduction and any nonair quality health and environmental impact and energy requirements) the Administrator determines has been adequately demonstrated.[5]

Thus, as the U.S. Supreme Court ("Supreme Court" or "the Court") recently explained, Section 111:

> directs EPA to (1) 'determine[],' taking into account various factors, the 'best system of emission reduction which . . . has been adequately demonstrated,' (2) ascertain the 'degree of emission limitation achievable through the application' of that system, and (3) impose an emissions limit on new stationary sources that 'reflects' that amount.[6]

While NSPS standards under Section 111 are often promulgated and revised in conjunction with standards under CAA Section 112, the Supreme Court took care to illustrate the important differences between these two standards. The Section 112 hazardous air pollutant ("HAP") program "primarily targets pollutants, other than those already covered by a NAAQS, that present 'a threat of adverse human health effects,' including substances known or anticipated to be 'carcinogenic, mutagenic, teratogenic, neurotoxic,' or otherwise 'acutely or chronically toxic.'"[7] The Court explained further that "EPA's regulatory role with respect to these toxic pollutants is different . . ." from CAA programs that are not primarily focused on air toxics:[8]

> As to each hazardous pollutant, by contrast, the Agency must promulgate emissions standards for both new and existing major sources. . . . Those standards must 'require the maximum degree of reduction in emissions . . . that the [EPA] Administrator, taking into consideration the cost of achieving such emission reduction, and any non-air quality health and environmental impacts and energy requirements, determines is achievable . . . through application of measures, processes, methods, systems or techniques' of emission reduction. . . . In other words, EPA must directly require all covered sources to reduce their emissions to a certain level. And it chooses that level by determining the 'maximum degree of reduction' it considers 'achievable' in practice by using the best existing technologies and methods.[9]

---

[5] CAA Sec. 111(a)(1).

[6] *West Virginia v. EPA*, 597 U.S. __, slip op. at 5 (June 30, 2022)(internal citations omitted).

[7] *Id.* at 3 (citing CAA Section 112(b)(2)).

[8] *Id.*

[9] *Id.* at 3-4.

Thus, given the toxic substances involved, Congress crafted Section 112 to allow EPA to impose more stringent standards that are applicable to all sources within a sector. The Section 111 BSER standard, on the other hand, was designed to ensure that industry sectors' contributions to air pollution generally are addressed over time by imposing only on new, modified, or reconstructed sources emissions limits that have been demonstrated to be achievable within the industry. Stated differently, while Section 112 requires all facilities within a sector to reduce emissions to the extent achievable through the best technology, Section 111 merely prohibits new facilities from emitting more pollutants at levels higher than what existing facilities have already demonstrated to be achievable. This standard is discussed further below.

1. BSER and Achievability

In applying the BSER standard, the U.S. Court of Appeals for the District of Columbia Circuit ("D.C. Circuit") explained "[i]t is the system which must be adequately demonstrated and the standard which must be achievable."[10] To be adequately demonstrated, a pollution control system must be "shown to be reasonably reliable, reasonably efficient, and which can reasonably be expected to serve the interests of pollution control without becoming exorbitantly costly in an economic or environmental way."[11]

"An achievable standard is one which is within the realm of the adequately demonstrated system's efficiency."[12] EPA "may make a projection based on existing technology, though that projection is subject to the restraints of reasonableness and cannot be based on crystal ball inquiry."[13]

To be achievable, "a uniform standard must be capable of being met under most adverse conditions which can reasonably be expected to recur and which are not or cannot be taken into account in determining the 'costs' of compliance."[14] Similarly, in assessing whether a standard is achievable, EPA must account for routine operating variability associated with performance of the system on whose performance the standard is based.[15] Thus, EPA must do more than show that the standard was achieved at a model plant for a short period of time. The Agency has the burden of showing how the standard is achievable under

[10] *Essex Chemical Corporation v. Ruckelshaus*, 486 F. 2d 427, 433 (D.C. Cir. 1973).

[11] *Id.*.

[12] *Id*.

[13] *Portland Cement Ass'n* , 486 F.2d at 391.

[14] *National Lime Ass'n v. EPA*, 627 F.2d 416, 431, n. 46 (D.C. Cir. 1980).

[15] *Id.* at 431-433; *See also* 79 Fed. Reg. at 39,245.

the range of relevant conditions that may affect the emissions to be regulated anywhere in the country.[16] BSER limitations must be capable of being met on a constant, rather than an averaging, basis.[17]

In assessing the achievability of a standard, EPA also must consider the amount of time sources have before they are required to comply with a new NSPS emissions limit.[18] A standard that is based on a presumption that compliance can be broadly achieved on a timely basis can be considered reasonable only if EPA's assumptions about the alacrity and efficacy of the emissions controls are reasonable and supported by the record.[19]

2. Costs

EPA also must consider costs when determining BSER. While Section 111 requires EPA to consider cost independent of the Agency's consideration of achievability, some aspects of achievability cannot be divorced from the consideration of costs.[20] For instance, the frequency and extent of efforts necessary to maintain continuous compliance with a standard that cannot be readily met on a continuous basis (given the variability of operating and atmospheric conditions) impose costs that EPA must consider and also indicate that the standard may not be achievable under courts' interpretations of Section 111.[21]

Although Section 111 does not specify precisely how EPA must consider costs in determining BSER, Section 307 of the CAA and the APA both mandate that "[f]ederal administrative agencies are required to engage in 'reasoned decisionmaking.'"[22] This minimal but essential requirement that agencies engage in reasonable decision-making was central to the Supreme Court's decision in *Michigan v. EPA*.[23]

In *Michigan v. EPA*, the Court evaluated whether EPA had properly promulgated a NESHAP under Section 112. The majority concluded that the CAA's requirement that EPA promulgate rules that were "appropriate and necessary" amounted to a congressional mandate to consider cost. In Section 111, the

---

[16] *National Lime Ass'n v. EPA* at 433; *See also* EPA, Electric Arc Furnaces and Argon-Oxygen Decarburization Vessels in Steel Industry - *Background Information for Proposed Revisions to Standards, Preliminary Draft,* at 2-6, 2-7 (June 1982) ("*1982 BID*"). ("Standards of performance must: (1) realistically reflect best demonstrated control practice; (2) adequately consider the cost, the nonair quality health and environmental impacts, and the energy requirements of such control; (3) be applicable to existing sources that are modified or reconstructed as well as to new installations; and (4) meet these conditions for all variations of operating conditions being considered anywhere in the country.")

[17] *National Lime Ass'n v. EPA* at 433-434.

[18] *Portland Cement Ass'n* , 486 F.2d at 391.

[19] *Id*.

[20] *National Lime Ass'n v. EPA* at 431, n.45.

[21] *Id*.

[22] *Michigan v. EPA*, 135 S. Ct. 2699, 2707 (2015) (quoting *Allentown Mack Sales & Service, Inc. v. NLRB*, 522 U.S. 359, 374 (1998)) (internal quotation marks omitted).

[23] *Id*.

requirement that EPA take "into account the cost of achieving such reduction" is expressly stated.[24] What is relevant here is the Court's description of the central importance of EPA's consideration of costs to the reasonableness, and therefore the lawfulness, of the Agency decision:

> Agencies have long treated cost as a centrally relevant factor when deciding whether to regulate. Consideration of cost reflects the understanding that reasonable regulation ordinarily requires paying attention to the advantages *and* the disadvantages of agency decisions. It also reflects the reality that 'too much wasteful expenditure devoted to one problem may well mean considerably fewer resources available to deal effectively with other (perhaps more serious) problems.'[25]

The Court went on to explain that it is not enough that EPA simply consider economic impacts as if the inquiry were simply some analytical box that must be checked before the Agency can proceed to a final action; "reasoned decisionmaking"[26] requires that EPA's final determination logically and rationally rest on its economic analysis:

> One would not say that it is even rational, never mind 'appropriate,' to impose billions of dollars in economic costs in return for a few dollars in health or environmental benefits . . . The Government concedes that if the Agency were to find that emissions from power plants do damage to human health, but that the technologies needed to eliminate these emissions do even more damage to human health, it would still deem regulation appropriate . . . No regulation is 'appropriate' if it does significantly more harm than good.[27]

Moreover, while the dissent in *Michigan v. EPA* disagreed with the majority about the precise point in the rulemaking process that EPA should have evaluated costs, the dissenting justices agreed with the majority that courts may not uphold agency actions that fail to consider economic impacts or that simply analyze those impacts as a procedural box-checking exercise only to ignore them when reaching a final determination:

> Cost is almost always a relevant—and usually, a highly important—factor in regulation. Unless Congress provides otherwise, an agency acts unreasonably in establishing a standard-setting process that ignores economic considerations. At a minimum, that is because such a process would 'threaten to impose massive costs far in excess of any benefit.' And accounting for costs is particularly important 'in an age of limited resources. . . .'[28]

Thus, in *Michigan v. EPA*, both the majority and the minority agreed that EPA must consider economic impacts when promulgating rules under the CAA and that the consideration of economic impacts is only

---

[24] CAA § 111(a)(1).

[25] *Michigan v. EPA*, 135 S.Ct. at 2707-08 (quoting *Entergy Corp. v. Riverkeeper, Inc.*, 556 U. S. 208, 233 (2009) (Breyer, J., concurring in part and dissenting in part).

[26] *Allentown Mack Sales & Service, Inc. v. NLRB*, 522 U. S. 359, 374 (1998).

[27] *Michigan v. EPA*, 135 S.Ct. at 2707.

[28] *Id*. at 2716-17.

reasonable when the Agency's impact analysis is rationally and logically connected to EPA's ultimate regulatory determination. As Judge Kavanaugh noted in dissent in the appellate court decision that was appealed to the Supreme Court in *Michigan v. EPA*, where the "only statutory discretion is to decide whether it is 'appropriate' to go forward with the regulation . . . common sense and sound government practice" warrant consideration of both costs and benefits.[29]

As applied here, this means that EPA cannot support its determination of BSER without a cost analysis that is reasonable, adequately explained, and rationally connected to data and information in the administrative record about the extent of known and reasonably foreseeable costs associated with the new standard. This also means that EPA cannot lawfully promulgate revisions to the NSPS unless it can credibly conclude that the benefits of the revision will exceed its costs.

3. Energy and Other Non-Air Quality Impacts

EPA also must consider other *non-air-quality environmental impacts* of a standard, and thus BSER may not always reflect the lowest air emission standard achievable if the lower standard could result in other adverse environmental impacts. As one court stated, "[t]he standard of the best system is comprehensive, and we cannot imagine that Congress intended that the best system could apply to a system which did more damage to water than it prevented to air."[30] Accordingly, in evaluating two different control systems, EPA may not simply choose the most cost-effective air pollution control system if it would create adverse environmental impacts on other media or, as relevant here, potentially have adverse impacts on the health and safety of workers within the meltshop. The Agency is required to evaluate potential adverse energy impacts associated with particular controls in a similar fashion.

4. NSPS Revisions

As previously noted, EPA's review of the NSPS is guided by the same CAA definition of "standard of performance" applicable to EPA's initial promulgation of the NSPS. Revisions, however, are also based on the following additional considerations:

> The Administrator shall, at least every 8 years, review and, if appropriate, revise such standards following the procedure required by this subsection for promulgation of such standards. Notwithstanding the requirements of the previous sentence, the Administrator need not review any such standard if the Administrator determines that such review is not appropriate in light of readily available information on the efficacy of such standard. . . . When implementation and enforcement of any requirement of this chapter indicate that emission limitations and percent reductions beyond those required by the standards promulgated under this section are achieved in practice, the

[29] *White Stallion Energy Ctr, LLC v. Envtl. Prot. Agency*, 748 F.3d 1222, 1258-1259 (D.C. Cir. 2014) (Kavanaugh, J. dissenting).

[30] *Portland Cement Ass'n,* 486 F.2d at 386.

> Administrator shall, when revising standards promulgated under this section, consider the emission limitations and percent reductions achieved in practice.[31]

Thus, in reviewing an NSPS, EPA must first assess changes that have occurred in the source category since the last NSPS review.[32] The Agency must then identify currently used, new, or emerging control systems and evaluate whether those systems represent advances in emission reduction techniques compared to the control techniques used to comply with the existing NSPS.[33] For each new or emerging control option identified, EPA must assess anticipated emission reductions, costs, energy requirements, and non-air-quality impacts.[34]

5. Factual and Analytical Requirements for NSPS Revisions

While the NSPS review provisions at Section 111(b)(1)(B) plainly contemplate that the Agency's BSER determinations may change over time, both the CAA and basic principles of administrative law prohibit EPA from imposing new BSER requirements on facilities that are not new, modified, or reconstructed. Additionally, when examining BSER for a proposed new subpart applicable to facilities that are newly constructed, reconstructed or modified after the data of the proposal, EPA remains bound by its obligation to "examine the relevant data and articulate a satisfactory explanation for its action including a 'rational connection between the facts found and the choice made.'"[35] And if the NSPS revision "rests upon factual findings that contradict those which underlay [an agency's] prior policy," EPA "must" provide "a more detailed justification" for the changes.[36]

This means that EPA cannot promulgate revised standards unless it provides a detailed justification for each change and describes the factual basis on which EPA reached its determination that changes were necessary.

This also means that the facts and data to which EPA must rationally connect its NSPS revisions can only come from the rulemaking docket. Section 307 of the CAA requires EPA to establish a rulemaking docket "[n]ot later than the date of proposal,"[37] and prohibits final rules with putative NSPS revisions from being "based (in part or whole) on any information or data which has not been placed in the docket."[38] "[T]he additional notice requirements in § 307(d)(3) suggest that Congress intended agency notice under

---

[31] CAA § 111(b)(1)(b).

[32] *See* 79 Fed. Reg. at 39,248.

[33] *Id*.

[34] *Id*.

[35] *Motor Vehicle Mfrs. Ass'n of U.S., Inc. v. State Farm Mut. Auto. Ins. Co.*, 463 U.S. 29, 43 (1983) (quoting *Burlington Truck Lines v. United States*, 371 U.S. 156, 168, (1962)).

[36] *F.C.C. v. Fox Television Stations, Inc.*, 556 U.S. 502, 515 (2009).

[37] 42 U.S.C. 7607(d)(2).

[38] 42 U.S.C. 7607(d)(6)(B).

the Clean Air Act to be more, not less, extensive than under the APA."[39] "Thus EPA must justify its rulemaking solely on the basis of the record it compiles and makes public."[40]

B. NSPS REVISIONS DO NOT ALLOW FOR RETROACTIVE IMPOSITION OF MORE STRINGENT STANDARDS ON FACILITIES THAT ARE NOT NEW, MODIFIED OR RECONSTRUCTED AFTER THE DATE OF PROPOSED NSPS REVISIONS

EPA's Proposed NSPS Revisions seek to impose several new requirements on owners and operators of existing sources subject to Subparts AA or AAa that are neither modified nor reconstructed on or after the date of EPA's Proposed NSPS Revisions (May 16, 2022). For those sources constructed, modified, or reconstructed on or after October 21, 1974 but before May 16, 2022, EPA's Proposed NSPS Revisions would impermissibly impose on owners and operators costly, burdensome, and fundamentally different new standards and requirements, including: (1) requirements to monitor and comply with fugitive opacity limits during "charging and tapping, or during the period established to have the greatest potential for uncaptured emissions to escape the melt"[41] rather than "melting and refining"; (2) install, calibrate, and maintain multiple types of operational monitoring systems (40 C.F.R. § 60.264, § 60.264a) instead of utilizing one such mechanism as currently required; and (3) install, calibrate, and, operate BLDS on all baghouses.[42] These proposed changes to Subparts AA and AAa represent impermissible retroactive rulemaking that is wholly inconsistent with the CAA, multiple court decisions interpreting the Act, and EPA's long-standing implementation of Section 111 generally and with respect to the EAF NSPS specifically. The Steel Associations therefore respectfully request that EPA rescind those proposed NSPS Revisions that would retroactively impose new requirements on sources that have not been constructed, modified, or reconstructed on or after May 16, 2022.

One of the fundamental principles of administrative rulemaking is that "retroactivity is not favored in the law."[43] Consequently, "[a]n agency may not promulgate retroactive rules absent express congressional authority."[44]

---

[39] *Small Refiner Lead Phase-Down Task Force v. E.P.A.*, 705 F.2d 506, 550 (D.C. Cir. 1983).

[40] *Sierra Club v. Costle*, 657 F.2d 298, 401 (D.C. Cir. 1981)*; see also Bd. of Regents of Univ. of Washington v. E.P.A.*, 86 F.3d 1214, 1222 (D.C. Cir. 1996) ("*Sierra Club* involved statutory language (§ 307(d) of the Clean Air Act, 42 U.S.C. § 7607(d)) providing that all documents 'of central relevance to the rulemaking' were to be placed in the docket as soon as possible after they became available, . . . language that has no counterpart in the notice-and-comment provisions of 5 U.S.C. § 553.").

[41] Proposed revised sections 60.273(d) and 60.273a(d) would be altered to require shop opacity observations to be taken "during charging or tapping, or during the period established to have the greatest potential for uncaptured emissions to escape the melt shop," rather than "when the furnace is operating in the meltdown and refining period."

[42] *See* Proposed Amendments to Subparts AA and AAa at EPA-HQ-OAR-2002-0049-0078.

[43] *Bowen v. Georgetown Univ. Hosp.*, 488 U.S. 204, 208 (1988).

[44] *Nat'l Min. Ass'n v. Dep't of Labor*, 292 F.3d 849, 859 (D.C. Cir. 2002) (citing *Bowen*, 488 U.S. at 208).

Such an express authorization to promulgate retroactive rules is entirely absent from the CAA; no provision in the CAA allows EPA to issue any kind of rule with retroactive effect.[45] And, to the contrary, the provision of the Act at issue here (Section 111) expressly precludes the retroactive imposition of new regulatory requirements on facilities unless they are new, reconstructed, or modified.

Congress limited the application of Section 111 to new sources of pollution by defining "new source" as "any stationary sources, the construction or modification of which is commenced" after the date the standard of performance is initially proposed or subsequently proposed to be revised.[46] Through this definition, Congress expressly limited EPA's ability to impose new regulatory requirements under Section 111 on sources newly constructed or modified after the date of the proposed NSPS, and therefore precluded EPA from imposing new regulatory requirements on existing sources that had not commenced construction or modification after the date EPA initially proposed or revised a standard of performance.

This focus on new sources of pollution is a purposeful and fundamental paradigm of Section 111. Congress enacted Section 111 and its limited applicability to "new sources" based on the pragmatic view that it was easier and more cost-effective to design and incorporate new air pollution control equipment during initial construction rather than through costly retrofits. Notwithstanding Section 111's focus on "new sources" of air pollution, Congress recognized that "existing sources" could become "new sources" if they were modified in a way that increased the amount of a pollutant previously emitted or resulted in the emission of an air pollutant not previously emitted." Similarly, Congress recognized that, regardless of the potential for, or extent of, emission increases, sources could be modified to such a degree that they would essentially become reconstructions of new sources within existing source footprints. While these provisions allowed EPA to impose NSPS on existing sources, Congress only allowed these standards to be imposed when the facility would undergo a level of modification that made it less like an existing source for which the requirement to impose new air pollution control equipment is more disruptive and costly, and more like a new source that is amenable to efficient pre-construction design and incorporation of air pollution controls.

Indeed, unless EPA's Section 111 authority to impose new regulatory requirements is limited to "new sources" that commence construction, modification, or reconstruction after the date the proposed standards are published, the Section 111(b)(1)(b) requirement that "[s]tandards of performance or revisions thereof . . . become effective upon promulgation"[47] would be altogether unworkable. Substantial new regulatory requirements can perhaps feasibly take effect upon promulgation when the affected facilities are in the midst of construction, modification, or reconstruction. Such requirements are decidedly infeasible when the affected facility is not undergoing these types of changes or any changes at

[45] *See Sierra Club v. Whitman*, 285 F.3d 63, 68 (D.C. Cir. 2002) ("The relevant provisions of the Clean Air Act contain no language suggesting that Congress intended to give EPA the unusual ability to implement rules retroactively.").

[46] 42 U.S.C. § 7411(a)(2).

[47] 42 U.S.C. § 7411(b)(1)(B).

all. For instance, how might an existing source that currently does not operate a BLDS timely comply with a requirement to install, calibrate, and operate a BLDS that is "effective upon promulgation?"

The preamble to EPA's proposed NSPS Revisions suggests that "[t]he impact[] of these proposed rules are to clarify current rules."[48] That statement is not accurate. A provision operates retroactively when it "impair[s] rights a party possessed when he acted, increase[s] a party's liability for past conduct, or impose[s] new duties with respect to transactions already completed."[49] In the administrative context, a rule is retroactive if it "takes away or impairs vested rights acquired under existing law, or creates a new obligation, imposes a new duty, or attaches a new disability in respect to transactions or considerations already past."[50] Similarly, if a new rule is "substantively inconsistent" with a prior agency practice and attaches new legal consequences to events completed before its enactment, it operates retroactively.[51] The critical question is whether a rule establishes an interpretation that "changes the legal landscape."[52]

While some aspects of EPA's proposal could be considered as clarifying existing requirements, none of the proposed changes to the existing monitoring requirements in Subparts AA and AAa can be plausibly construed as clarifications. These are completely new obligations that impose entirely new requirements and conditions on sources' ability to operate. And, as the D.C. Circuit has acknowledged, "[c]onverting a periodic standard into a continuous one makes the standard more rigorous because . . . continuous monitoring will capture all the fluctuations and variability inherent in emissions and thus increase each source's number of 'violations.'"[53]

In the case of EPA's proposed new requirement to conduct VE monitoring during "charging and tapping, or during the period established to have the greatest potential for uncaptured emissions to escape the melt shop,"[54] as opposed to the period of "melting and refining," EPA's proposed change effectively represents an entirely new emissions standard. Courts recognized that changes in monitoring requirements can effectively change the stringency of a standard.[55]

---

[48] 87 Fed. Reg. at 29,728.

[49] *Landgraf v. USI Film Prods.*, 511 U.S. 244, 280 (1994).

[50] *Nat'l Mining Ass'n v. United States Dep't of Interior*, 177 F.3d 1, 8 (D.C.Cir. 1999) (quoting *Ass'n of Accredited Cosmetology Sch. v. Alexander*, 979 F.2d 859, 864 (D.C.Cir. 1992)).

[51] *Nat'l Mining Ass'n v. Dep't of Labor*, 292 F.3d 849, 860 (D.C. Cir. 2002).

[52] *Nat'l Mining Ass'n v. United States Dep't of Interior*, 177 F.3d 1, 8 (*quoting Health Ins. Ass'n of Am., Inc. v. Shalala*, 23 F.3d 412, 423 (D.C.Cir. 1994)).

[53] *Clean Air Implementation Project v. EPA*, 150 F.3d 1200, 2014 (D.C. Cir. 2000).

[54] Proposed revised sections 60.273(d) and 60.273a(d) would be altered to require shop opacity observations to be taken "during charging or tapping, or during the period established to have the greatest potential for uncaptured emissions to escape the melt shop," rather than "when the furnace is operating in the meltdown and refining period."

[55] *See Clean Air Implementation Project v. EPA*, 150 F.3d 1200, 2014 (D.C. Cir. 2000).

For these reasons, in its 1983 revisions to the NSPS, EPA used its authority to establish a new subpart to ensure that new regulatory requirements and obligations were appropriately constrained to those new and modified facilities, the construction, modification, or reconstruction of which commenced after publication of the proposed revision.[56] As EPA explained in its background document for the NSPS revision it would finalize in 1984, "[r]evisions are made to ensure that the standards continue to reflect the best systems that become available in the future. **Such revisions will not be retroactive but will apply to stationary sources constructed or modified after the proposal of the revised standards.**"[57]

Agencies are permitted to change policy positions and adopt new regulatory interpretations, but they cannot do so in the manner EPA is proposing.[58] New and changed policy positions are subject to the same judicial review standards [59] under which "a reviewing court shall . . . hold unlawful and set aside agency action, findings, and conclusions found to be . . . arbitrary, capricious, an abuse of discretion, or otherwise not in accordance with law."[60]

This standard requires agencies to "examine the relevant data and articulate a satisfactory explanation for its action including a 'rational connection between the facts found and the choice made.'"[61] That said, if a "new policy rests upon factual findings that contradict those which underlay [an agency's] prior policy," the agency "must" provide "a more detailed justification" for its action.[62] The same is true if the agency's "prior policy has engendered serious reliance interests that must be taken into account."[63] In such cases, in order to offer "a satisfactory explanation" for its action, as part of providing "a rational connection

---

[56] *See* 49 Fed. Reg. 43,838 (Oct. 31, 1984); the 1999 Direct Final Rule revising the NSPS made changes to both Subparts AA and AAa to add alternative requirements for the monitoring of EAF capture systems in response to recommendations made by the Common Sense Initiative (CSI) subcommittee on iron and steel. The CSI was established by the Administrator to bring together affected stakeholders to find cleaner, cheaper, and smarter environmental management solutions. These editorial changes did not affect the applicability or requirements of the rule. 64 Fed. Reg. 10,105 (Mar. 2, 1999). Similarly, the 2005 revisions to the NSPS were adopted in response to a petition from the Steel Associations and did not add or increase the stringency of requirements applicable to facilities subject to Subparts AA or AAa. 70 Fed. Reg. 8,523 (Feb. 22, 2005).

[57] *1982 BID* at 2-11 (emphasis added). *See also* EPA's proposal to add Subpart AAa ("Standards of performance could apply to individual new, modified, or reconstructed facilities within an existing shop; thus, it was necessary to analyze modified or retrofit situations in addition to entirely new shops.") 48 Fed. Reg. 37,338 at 37,345 (Aug. 17, 1983). *See also* EPA, *Background Information for Standards of Performance: Electric Arc Furnaces in the Steel Industry Volume 1: Proposed Standards* at xvii (Oct. 1974) ("*1974 BID*") ("Such revisions will not be retroactive but will apply to stationary sources constructed or modified after proposal of the revised standards.").

[58] *F.C.C. v. Fox Television Stations, Inc.*, 556 U.S. 502 (2009).

[59] *Id.* at 515 ("The [APA] makes no distinction . . . between initial agency action and subsequent agency action undoing or revising that action.").

[60] 5 U.S.C. § 706(2)(A).

[61] *Motor Vehicle Mfrs. Ass'n of U.S., Inc. v. State Farm Mut. Auto. Ins. Co.*, 463 U.S. 29, 43 (1983) (quoting *Burlington Truck Lines v. United States*, 371 U.S. 156, 168, (1962)).

[62] *F.C.C. v. Fox Television Stations, Inc.*, 556 U.S. at 515.

[63] *Id*.

between the facts found and the choice made,"[64] the agency must give "a reasoned explanation . . . for disregarding facts and circumstances that underlay or were engendered by the prior policy."[65] Here, for the proposed NSPS Revisions, EPA provides no explanation at all for its decision to impose new regulatory requirements and obligations on existing facilities through proposed amendments to the existing subparts (Subparts AA and AAa).

For example, and as explained further in Section IV, EPA provides no explanation for the proposal to add retroactively new shop opacity monitoring requirements to Subparts AA and AAa (*e.g.*, measuring compliance with fugitive opacity limits during "charging and tapping," rather than "melting and refining). EPA also nowhere explains why the Agency is changing the operational monitoring requirements imposed on existing NSPS facilities. EPA fails to provide any justification for these proposed changes, fails to explain why the existing requirements promulgated in prior NSPS revisions are no longer adequate, and fails to identify the information and data on which the Agency relied in developing these proposed changes. In short, EPA fails to articulate the problem(s) that its proposed changes purport to solve. Nor does EPA's record reflect that the Agency meaningfully accounted for or even considered how the Subpart AA and AAa monitoring requirements engendered serious reliance interests among sources that already installed, calibrated, and currently operate emissions monitoring technology required by the existing NSPS standards; incorporated those monitoring requirements into their Title V permit; engineered and operate their affected facility and emissions control technology to ensure compliance as measured by those monitoring requirements; and reasonably expected that these compliance monitoring provisions would not change unless the sources modify or reconstruct their EAF or AOD.

Far from providing a "reasoned explanation" or "a more detailed justification" for these proposed changes, EPA's proposed NSPS Revisions provide no justification or explanation at all. Indeed, EPA's Economic Impact Analysis considered "costs and emissions impacts" only associated with the proposed new Subpart AAb.[66] EPA assumes its changes to Subparts AA and AAa will have no impact on emissions and will result in no new costs. As such, while "the requirement that an agency provide a reasoned explanation for its action would ordinarily demand that it display awareness that it *is* changing position,"[67] the Agency's proposed NSPS Revisions reflect no acknowledgement that EPA is proposing a fundamental change that is both substantive and costly.

Section IV of these comments provide a more detailed discussion of how the proposed revisions to the shop opacity standard, operational monitoring, and BLDS requirements, are not mere clarifications but retroactive changes that affect the stringency of the rule with no benefit.

---

[64] *Motor Vehicle Mfrs. Ass'n of U.S., Inc. v. State Farm Mut. Auto. Ins. Co.*, 463 U.S. at 43 (1983) (internal quotations omitted).

[65] *F.C.C. v. Fox Television Stations, Inc.*, 556 U.S. at 515.

[66] Economic Impact Analysis for the Proposed Standards of Performance for Steel Plans; Electric Arc Furnaces and Argon-Oxygen Decarburization Vessels; EPA-452/R-22-001 (Apr. 2022) ("EIA").

[67] *F.C.C. v. Fox Television Stations, Inc.*, 556 U.S. 502, 515 (emphasis in original).

II. THE PROPOSED ZERO PERCENT SHOP OPACITY LIMIT IS NOT BSER

The proposed Subpart AAb zero percent shop opacity limit does not reflect BSER, is not "adequately demonstrated" by data in the record or from current EAF steel mills, and is based on a limited data set that is not representative of long-term compliance performance.

EPA proposes to mandate a prohibition on fugitive emissions that "exit from a shop and, due solely to the operations of any affected EAF(s) or AOD vessel(s), exhibit greater than 0 percent opacity."[68] Compliance is to be "measured in accordance with EPA Method 9 . . . or, as an alternative, [the variation of the ASTM standard for DCOT] . . . or, for the daily opacity observation only, exhibit 0 seconds of visible emissions as measured by EPA Method 22 . . . modified to require the recording of the aggregate duration of visible emissions at 15 second intervals."[69] Visible emissions monitoring is to be performed during "charging and tapping, or during the period established to have the greatest potential for uncaptured emissions to escape the melt shop."[70]

The agency claims that

> [T]he proposed melt shop opacity of 0 percent was being achieved by 19 of the 31 facilities for which the EPA has opacity data (from 2010), and that for the remaining 12 facilities, average opacity in the test data was no higher than 1.2 percent (with a range of 0.1 percent to 1.2 percent). Based on these data, we conclude that an opacity limit of 0 percent is feasible and well demonstrated.[71]

To achieve compliance, EPA assumes use or addition of a "partial roof canopy (segmented canopy hood, closed roof over furnace, open roof monitor elsewhere) to collect PM emissions that might otherwise escape through the melt shop roof vents *to achieve complete control of melt shop fugitives*."[72] No other capital costs (for this or any other element of the rule) are assumed or analyzed.[73] However, EPA also asserts:

> We estimate that the actual cost impacts of the proposed 0 percent opacity limit likely would be lower because we expect any new, modified, or reconstructed facility would be able to meet the proposed

[68] 40 C.F.R. § 60.272b(a)(3) (proposed).

[69] *Id.*

[70] 40 C.F.R. § 60.273b(d) (proposed). Proposed revised sections 60.273(d) and 60.273a(d) would be altered to require shop opacity observations to be taken "during charging or tapping, or during the period established to have the greatest potential for uncaptured emissions to escape the melt shop," rather than "when the furnace is operating in the meltdown and refining period."

[71] 87 Fed. Reg. at 27,716.

[72] *Id.* (emphasis added). *See also* Memorandum from Donna Lee Jones, EPA, "Cost Analyses to Determine BSER for PM Emissions and Opacity from EAF Facilities," at 8 (Mar. 1, 2022) ("*Cost Analysis*"). EPA's *Cost Analysis* assesses the costs of compliance with the zero percent shop opacity limit as consisting of the "addition of a partition roof canopy (above the crane rails)."

[73] *Cost Analysis* at 20-22. The only non-capital cost assumed in the Agency's analysis is for testing every five years.

opacity and PM limits without any additional control equipment beyond those already required by NSR or applicable state requirements, or by minor process changes to improve capture of exhaust flows or other process parameters, if needed.[74]

A. The Proposed Zero Percent Shop Opacity Limit Is Not Adequately Demonstrated BSER

1. EPA's proposal is based on a limited subset of data that is not indicative of continuous long-term performance

EPA purports to have based the proposed Subpart AAb shop opacity limit on individual performance testing reports from a total of 13 EAF steel mills.[75] Notably, EPA's data set contained opacity data from 31 facilities' performance tests.[76] As such, the 13 facilities on which EPA focused represented the minority of the data set on shop opacity throughout the duration of the performance tests. Most facilities (16 out of 31) were unable to maintain zero percent shop opacity throughout the duration of the performance tests. Thus, even if a facility's ability to maintain zero percent shop opacity throughout the duration of a single performance test reasonably reflected that facility's ability to consistently maintain zero percent opacity throughout it daily operations (which it does not), the fact that the majority of facilities in EPA's database could not maintain zero percent opacity even for the short duration of performance testing plainly demonstrates that zero percent shop opacity is not adequately demonstrated.

Even if some facilities in EPA's database maintained zero percent shop opacity throughout a few hours of performance testing, these short-term observations are not representative of long-term compliance capability. Performance testing is designed to identify the parameters under which the primary emission control system performs at its most-challenged state, and involves running the furnace at near-maximum capacity to demonstrate compliance at the highest particulate generation rates. Those parameters are then used to guide operation and maintenance of the emission controls and baghouse during normal facility operations. Notably, the increased run capacity during performance testing also draws the most shop air into the evacuation control systems and baghouse. However, performance testing does not account for long-term variability in production and furnace operations, does not reflect the challenges that facilities face every day keeping the furnace and emission control systems operating at best efficiency, and does not adequately capture the frequency of material and equipment movements in and out of the meltshop (and related emissions) for operations other than the affected facilities, the need to increase melt shop ventilation (but not emissions) during summer months, or the diversity of weather conditions that can impede the efficient capture of emissions under short-term conditions.

Performance testing, accordingly, is a short-term snap shot of performance taken for a few hours under a specific set of conditions. The subset of data EPA relies on does not include longer-term operating

[74] 87 Fed. Reg. at 27,717.

[75] *Cost Analysis* at 3.

[76] Memorandum from Donna Lee Jones, EPA, to Electric Arc Furnace NSPS Technology Review Project Profile: *Particulate Matter Emissions from Electric Arc Furnace Facilities* at 14, Table 5 (Mar. 1, 2022) ("*Emissions Memorandum*").

performance of the identified mills. As detailed in section I.A above, NSPS, as defined by BSER, is to reflect what is achievable and has been adequately demonstrated by a wide variety of facilities operating under a wide variety of conditions, not simply the point in time during which performance is tested.

Long-term shop opacity data – based on a far larger dataset than the 51 "snap shot" test reports in EPA's rulemaking database – from the 13 mills identified by EPA[77] as achieving the zero percent standard tell a significantly different story, as provided below: zero percent shop opacity is not continuously achieved by the mills cited as exemplars.[78] Notably, the available data are only from periods during melting and refining, not during charging and tapping (or SSM periods).[79]

(1) *Facility #1*: Data collected from 2019-2021 show 14 readings over zero percent, collected during melting and refining.

For 2021: 3 readings >0%. (0.83%; 3.80%, 1.25%). Meltshop opacity is read daily when meltshop is operating. Total number of reading: 349.

For 2020: Zero readings above 0%. Total number of readings: 296.

For 2019: 11 readings>0%. (1.25%; 5.83%, 5.42%, 2.5%, 4.8%, 2.5%, 2.08%, 0.42%, 2.92%, 5.63%, 1.04%). Total number of readings: 294.

(2) *Facility #2*: Conducted 1,482 opacity readings from January 1, 2021 through June 22, 2022. Of those readings, 21 six-minute reads had opacity greater than 0%, with a maximum six minute average of 5.6%.

(3) *Facility #3*: Conducted 2,488 opacity readings from January 1, 2021 through June 24, 2022. Of those opacity readings, 61 six-minute readings had opacities greater than 0%, with a maximum six minute average of 4.5%.

(4) *Facility #4*: All opacity data collected only during melting and refining; no opacity data collected during charging and tapping.

(5) *Facility #5*: All opacity data collected only during melting and refining; no opacity data collected during charging and tapping.

---

[77] *Cost Analysis*, Table 1.

[78] For confidentiality reasons, we are providing only a summary of the shop opacity data from these 13 facilities. If EPA would like to review the test data referenced, we would be happy to provide it to the Agency.

[79] In addition, the proposed zero percent shop opacity limit should not apply to an EAF that utilizes "Hot Metal Charging." We are aware of one EAF steel facility operating in the United States that charges "Hot Metal" (*i.e.*, molten iron from a blast furnace). EPA has shop opacity data from this unique facility that includes 77 non-zero six-minute average opacity readings from 2005-2008. *See* Complaint, Appendix F, *United States and State of West Virginia v. RG Steel Wheeling, LLC,* Civil Action No. 5:12-cv-19 (N.D.W.Va) (Feb. 6, 2012).

(6) *Facility #6*: Recent stack testing reported average meltshop opacity of 4%.

(7) *Facility #7*: Recent stack testing reported average meltshop opacity of 0.4%, 1%, 2%, and 4%.

(8) *Facility #8*: Recent stack testing reported average meltshop opacity of 0.6% and 4%.

(9) *Facility #9*: Recently engaged in extensive discussions with EPA and agreed to a 3% shop opacity limit as a compromise with the Agency to more accurately reflect fugitive emissions. Performance test data does not account for long-term variability in production and furnace operations to demonstrate achievability of zero percent on a "continuous" basis; Method 9 and performance test data were collected only during melting and refining, and not during charging and tapping. Zero percent opacity was not considered achievable due to uncontrollable variability in production and furnace operations during charging, melting, refining, and/or tapping; sources of variability include the type/composition of scrap, quality of scrap, quality of final product, process melting rate, refining procedures, and tapping duration and temperature.

(10) *Facility #10*: Recently engaged in extensive discussions with EPA and agreed to a 3% opacity limit as a compromise with the Agency to more accurately reflect fugitive emissions. Performance test data does not account for long-term variability in production and furnace operations to demonstrate achievability of zero percent on a "continuous" basis; Method 9 and performance test data were collected only during melting and refining, and not during charging and tapping. Zero percent opacity was not considered achievable due to uncontrollable variability in production and furnace operations during charging, melting, refining, and/or tapping; sources of variability include the type/composition of scrap, quality of scrap, quality of final product, process melting rate, refining procedures, and tapping duration and temperature.

(11) *Facility #11*: All opacity data collected only during melting and refining; no opacity data collected during charging and tapping.

(12) *Facility #12*: All opacity data collected only during melting and refining; no opacity data collected during charging and tapping.

(13) *Facility #13*: All opacity data collected only during melting and refining; no opacity data collected during charging and tapping.

2. Shop opacity data in the record are not representative of performance during "charging and tapping"

In addition to the fact that EPA's database does not reflect long-term performance of the identified facilities, critically, the shop opacity data upon which EPA relies only reflects performance during stack testing required to be conducted during the "melting and refining" stage of production and not during the "charging and tapping" phase (or period of greatest potential emissions) to which EPA now proposes to apply the shop opacity standard not just for Subpart AAb, but also for existing Subparts AA and AAa. This is important because most EAF steel mills are designed such that the primary emission controls

(DEC) cannot be engaged while the furnace roof is off during charging and tapping. Hence, EPA's database is not reflective of the time period during which the shop opacity standard is proposed to be achieved (*i.e.*, charging and tapping), and, therefore, not "adequately demonstrated" BSER.

In addition to the shortcomings of the supporting data for the new Subpart AAb, EPA lacks data to demonstrate that Subpart AA and AAa facilities can meet the shop opacity limit during charging and tapping. All such data in the record are from performance tests in which the vast majority of the time the EAF is in the "melting and refining" modes with a relatively small portion of the time, if any, during charging and tapping. While EPA asserts in the 1983 Subpart AAa rulemaking that the standard can be met during charging/tapping based on "full heat cycle" data, there is no evidence in the record that the tests relied upon over 40 years ago actually included complete charging and tapping events.[80] In fact, it appears that the 1983 rulemaking docket included only seven hours of shop opacity data from some portion of the charging and tapping phase.[81] Such limited data from four decades ago is not representative of or sufficient to characterize current melt shop operations.

3. EPA Relies Particularly on One Mill that is Not Representative of the Industry

EPA included in its database one facility from the RACT/BACT/LAER Clearinghouse for which zero percent opacity was determined to be the "best available control technology" ("BACT").[82] This facility has a unique design and is not representative of the EAF steel industry. In particular, the facility utilizes a shaft furnace that continually feeds scrap metal to the EAF via a closed conveyor. With this design, there is no period when the primary emission control (DEC) is disengaged, as it is during charging and tapping of more traditional bucket-fed EAF steel furnace designs. Consteel, shaft, and other conveyor-fed furnace operations have different emissions-profiles than traditional bucket-charged furnaces and also are limited to certain scrap types and production rates. Accordingly, the emissions profile of this facility, and its shop opacity performance, is not representative of the majority of mills, which are bucket-fed, and cannot be considered BSER for the sector.

Alternatively, if this facility is the basis by which EPA presumes that zero percent opacity can be met on a long-term basis, then EPA must analyze the cost of replacing traditional EAFs with a shaft furnace configuration. EPA, of course, does not have the authority to change the design of facilities in this manner; and the cost for such a dramatic design change, of course, would be astronomical. Thus, whether examined technologically or economically, the achievability of zero percent shop opacity, as proposed by EPA, is not adequately demonstrated by this facility or any other current EAF in operation.

---

[80] *See* 49 Fed. Reg. at 43,841-842.

[81] *Id*.

[82] *Emissions Memorandum* at 11.

4. Zero percent opacity (combined with requirement for no holes or opening in the melt shop) is a surrogate for total building enclosure, which is not viable, necessary, or safe for workers

In adopting the 1984 Subpart AAa NSPS amendments, EPA considered requiring a closed roof configuration to achieve zero percent opacity, but dismissed that option given the impacts of heat stress on worker safety and equipment functioning:

> Regulatory Alternative C (closed roof) was not considered suitable as the basis for national standards of performance because it is based on a closed roof configuration which may aggravate worker and equipment heat stress problems. Operating experience with this roof configuration is limited in areas of the country where ambient temperatures and humidity are high. Because the effects of heat stress cannot be fully evaluated at this time, Regulatory Alternative B [partially open roof monitor] was selected as the basis for the proposed revised standards.[83]

As further explained in the 1983 Subpart AAa proposed rule:

> Some industry representatives have expressed concern about heat buildup due to the reduced ventilation in shops with closed roof configurations. Heat buildup results in elevated temperatures near the shop roof in steel mills that are located in geographical areas that experience high ambient temperatures and humidity. Personnel and equipment that must function near the shop roof, such as crane operators and the crane electrical equipment, need an air conditioned environment to prevent heat stress and equipment malfunctions. Heat buildup may also affect personnel on the floor of the shop.[84]

Not only did EPA consider these concerns, but the issue of heat stress was *outcome determinative* in the Agency's selection of the appropriate NSPS standard and adoption of the 6 percent shop opacity limit based on a partially open roof configuration. Yet, now, in proposing zero percent shop opacity (in combination with a requirement to ensure "the building does not have any holes or other openings for particulate matter laden air to escape"[85]) heat stress concerns are not acknowledged in the Agency's analysis or addressed in the rulemaking docket. Notably, as shown by recent U.S. Occupational Safety

---

[83] 49 Fed. Reg. at 43,841.

[84] 48 Fed. Reg. at 37,342.

[85] Proposed revisions to 40 C.F.R. § 60.274(e) and § 60.274a(d). Proposed new 40 C.F.R. § 60.274b(d) reads as follows (emphasis added):

> (d) Except as provided under paragraph (e) of this section, the owner or operator shall perform monthly operational status inspections of the equipment that is important to the performance of the capture system (i.e., pressure sensors, dampers, and damper switches). This inspection shall include observations of the physical appearance of the equipment (e.g., presence of holes in ductwork or hoods, flow constrictions caused by dents or excess accumulations of dust in ductwork, and fan erosion) and <u>building inspections to ensure that the building does not have any holes or other openings for particulate matter laden air to escape</u>. Any deficiencies that are determined by the operator to materially impact the efficacy of the capture system shall be noted and proper maintenance performed.

and Health Administration ("OSHA") initiatives to address heat stresses in indoor and outdoor work environments,[86] the causes of such heat stresses and their impacts on workers remain as important a concern as in 1983. While EPA is not now explicitly proposing "total building enclosure" – presumably having learned that such a proposal is unworkable and unacceptable, as noted below – the effect of a combined zero percent shop opacity and "no holes or other openings" in the melt shop requirement is functionally equivalent.

As in 1984, safe melt shop operation requires air flow to minimize potential heat stress on workers and equipment. Negative pressure alone in an EAF Melt shop is not sufficient to maintain proper airflow. Doors and other access points need to be open to enable the constant flow of equipment in and out of the melt shop building. Cross drafts are necessary for melt shop air quality and temperature maintenance. By requiring zero percent opacity and a requirement for no holes or openings in the melt shop, EPA is promoting total building enclosure, which the Agency previously considered unviable and unsafe for workers.

Zero percent shop opacity is a derivative or variant of a requirement for negative pressure within the meltshop at all times. In past discussions, EPA has cited the Secondary Lead Smelting NESHAP as a basis for asserting the achievability of zero opacity. However, lead smelters are readily distinguished from EAF steel mills: lead smelters are much smaller facilities with smaller furnaces, and those furnaces operate at much lower temperatures. Lead melts at 621.5° F and such lower temperature air requires less airflow for adequate capture and fume transport. In contrast, steel melts at approximately 3000° F and this hotter process temperature requires greater air flow and necessitates large makeup air sources. Lead smelters also do not require the large bay doors that EAF steel mills need to move large ladles, stacks of billets, dump trucks full of slag, and other equipment/materials. Moreover, movements in an out of lead smelters are more infrequent as well since smaller furnaces use less raw materials and make smaller batches of product. In contrast, the need for outside air flow within an EAF steel meltshop is much greater due to the dynamic heat environment and the need for need for make-up air for the furnace. Such air flow needs render maintaining negative pressure within and throughout the meltshop impossible in any practical sense. This challenge is compounded by the numerous factors that can influence shop opacity, such as the passage of weather fronts across the plant, which can cause pressure differentials between the exterior and interior of the meltshop and lead to potential observable shop opacity that cannot be prevented by any reasonable operator (as entrained dust within the meltshop can be blown out of the shop by wind during such events) (*i.e.*, wind may create negative pressure outside on the leeward side of the building and make maintaining negative pressure inside infeasible).

Worker safety concerns with closed meltshop requirements are at least as daunting. In prior rulemakings, the United Steelworkers ("USW") has objected to EPA's failure to evaluate worker risks from heat stress

[86] *See* https://www.osha.gov/sites/default/files/enforcement/directives/CPL_03-00-024.pdf.

and other factors resulting from proposed "total building enclosure" regulatory requirements.[87] As noted in USW's comments on the Ferroalloys NESHAP:

> The basic problem is that this measure forces employees to work inside control equipment, significantly increasing their exposure to toxic substances. Total building enclosure can also increase heat stress to intolerable levels and can even create safety hazards by reducing visibility.[88]

In the Ferroalloys NESHAP, as here, EPA failed to evaluate worker health issues and other impacts of a proposed requirements seal the building to prevent the potential escape of fugitive emissions. This omission is plainly inconsistent with the BSER standard.

BSER must take into account the cost of achieving such reductions and any non-air quality health and environmental impact and energy requirements. Trapping heat, reducing visibility within the shop, and increasing PM in the workplace environment are non-air quality impacts that must be considered. The proposed rule is lacking in any such analysis, which is particularly arbitrary given the Agency's primary concern with this issue during the Subpart AAa rulemaking.

Moreover, the "closed shop" approach is in conflict with OSHA's current Heat Stress Initiative and National Enforcement Program, which identifies "iron and steel mills" specifically as a high hazard industry for heat stress.[89] As OSHA advises: "The most effective way to prevent heat-related illness and fatality is to reduce heat stress in the workplace (e.g., increase air movement, reduce temperature, reduce humidity, and protect workers from solar radiation or other radiant heat sources)."[90] EPA's proposal, however, inappropriately pushes in the opposite direction and omits any consideration of worker safety.

B. EPA Should Clarify the Calculation for Zero Percent Opacity under Method 9

When using Method 9 to determine compliance with shop opacity limits, EPA appropriately proposes to continue to allow shop opacity to be determined based on the arithmetic average of 24 consecutive 15-

---

[87] *See, e.g.,* Comments of the United Steel, Paper and Forestry, Rubber, Manufacturing, Energy, Allied Industrial and Service Workers International Union on the Environmental Protection Agency's Proposed National Emission Standard for Hazardous Air Pollutants for Ferroalloys Productions ("Ferroalloys NESHAP"), Docket No. EPA-HQ-OAR-2010-0895 (Apr. 12, 2012).

[88] *Id.*

[89] https://www.osha.gov/sites/default/files/enforcement/directives/CPL_03-00-024.pdf:

> This NEP augments OSHA's efforts addressing unprogrammed-related activities, e.g., complaints, referrals, and severe incident reports, by adding an enforcement program targeting specific high hazard industries or activities in workplaces where this hazard is prevalent during high heat conditions, such as working outdoors in a local area experiencing a heat wave, as announced by the National Weather Service, <u>or working indoors near radiant heat sources, such as iron and steel mills and foundries</u>. (emphasis added)

See also Appendix A to the above-cited NEP: "Target Industries for Heat National Enforcement Program (NEP)"; Appendix D.3, "Engineering Practice Controls" (including "Increase general ventilation").

[90] OSHA Technical Manual, Section III Chapter 4 (https://www.osha.gov/otm/section-3-health-hazards/chapter-4).

second opacity observations over a six-minute period. In practice, from complying with the existing 6 percent shop opacity limit, and in discussions with EPA during this rulemaking, it is our understanding that calculating compliance with a "zero percent" standard, if finalized, does not require that there never be any observable visible emissions or that all 24 15-second Method 9 observation periods be recorded as zero percent. Rather, some of the 24 readings may exceed zero percent, so long as the arithmetic average rounds down to zero. Likewise, in calculating compliance with the existing 6 percent shop opacity standard, the arithmetic average may be rounded down to achieve the final number for purposes of determining compliance with the standard.

This approach is consistent with prior NSPS rulemakings, including Subpart KK (Lead-Acid Battery Manufacturing) and Subpart NN (Phosphate Rock Plants). For Subpart KK, in adopting a zero percent opacity limit for certain operations, EPA specified that "compliance with the opacity standard is to be determined by taking the average opacity over a 6-minute period, according to EPA Test Method 9, and rounding the average to the nearest whole percentage. The rounding procedure is specified in order to allow occasional brief emissions with opacities greater than 0 percent. . . ."[91] In proposing the Subpart KK limits, EPA further explained:

> The rounding procedure is specified in the proposed standards in order to allow occasional brief emissions with opacities greater than 0 percent.… If the rounding off procedure were not specified, any reading of greater than 0 percent opacity during a 6-minute period could be considered as indicative of a violation of the proposed 0 percent opacity standard.… With this specification, 6-minute average opacities less than 0.5 percent would not be considered violations of the proposed standards.[92]

For example, in adopting a zero percent opacity limit for certain operations under the Phosphate Rock Plants NSPS (Subpart NN), EPA explained:

> Method 9 procedures can allow some visible emissions during a demonstration of compliance with the zero percent limit. Opacity readings are recorded every 15 seconds for 6 minutes (24 readings). These readings are recorded in 5 percent increments (i.e., 0, 5, 10, etc.). The arithmetic average of the 24 readings rounded off to the nearest whole number (i.e., 0.4 would be rounded off to 0) is the value of opacity used for determining compliance with the opacity standards. Consequently, a zero percent opacity standard does not necessarily mean there are never any visible emissions. It means either that visible emissions during a 6-minute period are insufficient to cause a certified observer to record them as 5 percent opacity, or that the average of the twenty-four 15-second readings is calculated to be less than 0.5 percent. Therefore, although emissions released to the atmosphere from a grinder or ground rock handling and storage system may be visible to a certified observer, at some time during the observation period, the source may still be found in compliance with the zero percent opacity standard.[93]

[91] 47 Fed. Reg. 16,564, 16,566 (Apr. 16, 1982) (emphasis added).

[92] 45 Fed. Reg. 2,790, 2,794(Jan. 14, 1980) (emphasis added).

[93] 47 Fed. Reg. 16,582, 16,586 (Apr. 16, 1982) (emphasis added).

If a zero percent limit is finalized, to avoid confusion with inspectors or other regulators, we request that EPA reiterate the explanation provided above for assessing compliance with the final shop opacity limit.

C. Method 22 is an Inappropriate Method for Measuring Compliance with the Shop Opacity Limit

EPA proposes to allow the use of Method 22 for determining compliance with the shop opacity limit.[94] Method 22 does not require certification of the observer and is a qualitative test that does not quantify the level of opacity and simply notes if opacity may be present or not. Method 22 is less rigorous than Method 9 and is intended to observe large spikes of fugitive emissions and is significantly error prone when used to determine low levels of emissions, if any, that may occur for brief periods of time. Method 22 is also difficult to apply in situations when opacity may be caused not by emissions from the affected source but by other sources or from wind-borne fugitive emissions from off site. As such, simply noting that some opacity is observed using Method 22 is insufficient to conclude that it is in fact more than zero percent. Moreover, because Method 22 does not require certification, untrained observers could be placed in the position of evaluating compliance with the shop opacity limit.

There is no need to provide for the Method 22 option, as Method 9 has proven to be a reliable and well-established means of evaluating compliance with shop opacity limits. Offering the Method 22 option will lead to less precise (and potentially erroneous) VE observations and potential confusion over compliance with the shop opacity standard.

D. The Digital Camera Opacity Technique ("DCOT") is Inappropriate as a Compliance Measurement Option

EPA proposes to allow DCOT as an alternative mechanism for measuring compliance with the shop opacity requirements of Subparts AA, AAa, and newly proposed AAb.[95] Given the well-established questions about the accuracy and reliability of the optical devices for measuring fugitive emissions at levels as low as the existing EAF NSPS, much less the proposed levels, it is inappropriate to specify DCOT as an alternative compliance measurement option at this time. The Agency provides no explanation as to the suitability of the technique for use in assessing shop compliance with the proposed EAF steel shop opacity limits.

DCOT has not been proven to be accurate in enough settings and conditions, including conditions that routinely exist in the EAF steel industry, to warrant adoption as a method for measuring compliance with either the existing or proposed shop opacity limits in Subparts AA, AAa, and AAb. In fact, to our knowledge, DCOT is not used by any EAF steel producing facility subject to the NSPS standards.

As an initial matter, in 2007, as part of a settlement agreement resolving litigation brought by the Steel Associations over the continuous opacity monitoring ("COMS") provisions in the NSPS, EPA

[94] 40 C.F.R. § 60.272b(a)(3), § 60.273b(d).

[95] *See* Proposed 40 C.F.R. § 60.271(k), § 60.271a, and § 60.271b.

"acknowledged that there may be as much as 4 percent opacity error in data from a COMS meeting PS-1 requirements."[96] EPA based that conclusion on the fact that:

> We recognize that operational excursions (*e.g.*, misaligned mirrors, dust on the windows or mirrors) can produce positive measurement errors. Further, we note that there are calibration drift and other potential data quality issues associated with COMS operation that can result in positive or negative measurement errors.[97]

Like COMS, DCOT is an optical technology not suitable for large sources with fugitive emissions due to the same "operational excursions" and other data quality issues noted for COMs in EPA's 2007 letter. For any optical technology, these distortion and other issues are amplified the further the distance of the camera from the source.

The measurement issues associated with COMS have been confirmed for DCOT, as was presented in stakeholder comments as part of the Ferroalloys Production and IIS NESHAP Residual Risk and Technology Reviews. Notably, in those rulemakings, AISI submitted a paper ("Fugitive Emissions Opacity Determination Using the Digital Opacity Compliance System (DOCS)" by McFarland *et al.*) that clearly demonstrates, as discussed further below, that "on average, field results indicated that the DOCS technology consistently yielded opacity values that were greater than those reported by Method 9-certified human opacity observers."[98]

Fugitive emissions at EAF steel mills, if present, may be emitted from one or more broad roof vents that typically total over 300 feet in length and other non-point sources. In settings like these, the "low-velocity fugitive "plume" location can vary significantly over time, such "plumes" are often more diffuse than those emitted from stacks, and the observed "plume" color will vary. The conditions under which fugitive emission opacity measurements must be taken include variable ambient wind conditions, cloudy days, and other conditions adverse to high contrast between the ephemeral and varying "plume" and background. A high contrast between a coherent plume and background is the ideal condition for measuring opacity.

In addition, fugitive emissions must be observed over emissions points, such as roof monitors, that may encompass a number of additional sources besides the NSPS affected source. Some of these sources also may generate "plumes," either of particulate or water vapor of differing colors. An experienced and knowledgeable Method 9 observer can evaluate these situations and adjust accordingly. A DCOT system cannot. The rulemaking record lacks any analysis of the appropriateness of DCOT for use at EAF steel

---

[96] *See* 72 Fed. Reg. 53,769 (Sept. 20, 2007) (announcing settlement in *American Iron and Steel Institute et. al* v. *U.S. Environmental Protection Agency,* Case No. 00–1434 consolidated with Nos. 00-1435 and 05–1135 (D.C. Cir. 2007)); a copy of the letter issued by EPA as part of the settlement agreement is included in EPA Docket No. EPA–HQ–OGC–2007–0961.

[97] *Id.*

[98] Michael J. McFarland , Arthur C. Olivas , Sally G. Atkins , Robert L. Kennedy & Kalpesh Patel (2007) Fugitive Emissions Opacity Determination Using the Digital Opacity Compliance System (DOCS), Journal of the Air & Waste Management Association, 57:11, 1317-1325 ("the McFarland Report").

mills and we are unaware of any other Agency evaluation of the strong potential for erroneous false-positive readings due to the complex environmental settings noted above in measuring shop opacity.

Method 9 remains the preferable compliance measurement method, especially for measuring fugitive emission opacity under non-ideal conditions. Method 9 is a far more flexible approach, allowing for human observers to move locations, adjust to wind conditions, attend to the presence/absence and angle of sun light and account for the many other abnormalities that can exist in order to achieve the best opacity reading. The DCOT method is not well suited to achieve accurate opacity readings in such non-ideal conditions, particularly for measuring very low contrast and low opacity levels as in the current and proposed EAF NSPS.

The McFarland Report shows that precise placement of the camera is both very significant to the accuracy of the reading and yet impossible to do successfully ahead of the exact time of the opacity reading:

> The local wind shear would often redirect the fog plume away from traveling in a direction perpendicular to the line of sight of the DOCS cameras and Method 9-certified opacity observers.
>
> Beyond the difficulty in recording simultaneous opacity observations at the three observation stations, the rapidly changing wind direction meant that the use of dedicated targets was limited. <u>In other words, *a priori* placement of dedicated targets to observe fugitive emissions was impossible because of the inability to anticipate wind shear direction and magnitude</u>. After a number of failed attempts to place the dedicated targets in positions where they could be utilized for visible opacity determination, continued use of dedicated targets in the field study was aborted.[99]

Further, as noted above, the McFarland Report also found that at some off-set distances the digital camera opacity values were greater than Method 9 on a statistical basis.

> Results from Table 1 demonstrate that the field measurement of fugitive emissions opacity using the two methods yielded mixed findings under turbulent wind conditions. In the first set of opacity measurements (i.e., taken at a 30-ft off-set distance), the DOCS technology and Method 9-certified observers were found to generate opacity measurements that were statistically different. <u>Moreover, on average, field results indicated that the DOCS technology consistently yielded opacity values that were greater than those reported by Method 9-certified human opacity observers.</u>[100]
>
> ….
>
> Comparison of the performance of the DOCS technology with Method 9-certified observers at the mid-offset distances (90 and 150 ft) generally illustrated that <u>DOCS yielded higher opacity measurements than Method 9</u>.[101]

[99] McFarland Report at 1322 (emphasis added).

[100] *Id.*(emphasis added).

[101] *Id.* at 1323 (emphasis added).

In addition, the McFarland Report clearly demonstrates that meteorological issues alone complicate the accuracy of DCOT: "[T]he variability and uncertainty in local wind conditions significantly impacted the overall effectiveness in the field demonstration design. Of the 100 fog plumes scheduled for opacity analysis, only 38 opacity observations were deemed valid because of the adverse effects of localized wind shear on particle dispersion and transport."[102]

These findings by Dr. McFarland match those of Dr. Mark Rood, previous ASTM D7520 workgroup chair, in work he performed regarding digital opacity cameras having observed elevated opacity readings.

> [Digital Still Cameras or] DSCs have consistently larger maximum individual opacity error (IOE) values for all six compared categories … and the average opacity difference (AOD) values show that opacity values measured by DSCs are biased to be higher than the reference transmissometer opacity values, since all AOD values are positive at any opacity range.
>
> …
>
> It is clear that DSCs have consistently larger maximum IOE values for all six categories of tests. The comparison of normalized IOE values > 15% for DSCs and human observers is not as clear. Three of the six normalized IOE values are largest for DSCs and the same for human observer. The [Average Opacity Error] AOE values from DSCs are consistently larger than the corresponding values for AOE values from human observers for all six sets of results.[103, 104]

These facts raise obvious concerns with use of the DCOT method to ensure compliance with the shop opacity standard and are consistent with the wide error band findings EPA previously has acknowledged for optical technologies.

In sum, the opacity of fugitive emissions is simply difficult to assess accurately. Method 9 has been reliably employed for years to measure opacity, and the data on digital opacity cameras suggest that DCOT is clearly *not ready* as an alternative to Method 9 in measuring the opacity of fugitive emissions at the very low levels experienced at EAF steel mills.

In the IIS NESHAP rulemaking, EPA did not address or respond to the fundamental limitations of the DCOT methodology, documented in the McFarland Report and elsewhere. The Agency simply ignored the fact that DCOT is clearly not appropriate for assessing opacity from roof monitors, as would be needed for IIS or EAF steel mills, and proceeded to provide DCOT as an alternative to Method 9.

---

[102] *Id*. at 1325.

[103] Mark J. Rood and Associates, "Evaluation of the Use of Digital Still Cameras and Human Observers to determine Ambient Plume Opacity during Smoke School Evaluations" at 1, 4 (Aug. 25, 2016) (prepared for the American Iron and Steel Institute). The "six categories" refer to tests done for two plume colors (white and black) varied at three opacity ranges (0-100%, 0-20% and 0-10%).

[104] Dr. Rood's work involved the same camera, software and field campaign that was used to justify the DCOT technique for the ASTM workgroup.

In establishing the DCOT requirement for the Ferroalloys NESHAP,[105] EPA misconstrued the findings of the McFarland Report both with respect to the accuracy of DCOT compared to Method 9 and with regard to the implications of establishing an appropriate observation point. First, the Agency asserted that:

> We agree with the commenter that the observation point is a critical component of determining opacity. Changes in wind direction may require that the observer (if using EPA Method 9) or the camera (if using ASTM D7520) be moved in order to capture the opacity. We believe that both methods are equally capable of meeting this challenge. However, it should be noted that opacity readings are made perpendicular to the wind direction as stated in the method, not directly downwind. With regard to the findings in the McFarland study, the difficulty of determining opacity during ambient wind conditions was not limited to DCOT, but was also difficult for opacity determinations using EPA Method 9.[106]

The assertion that a mounted camera can be moved just as easily as a human observer to adjust the viewing location to account for wind, sunlight, contrast and other factors is objectively false. While ambient wind conditions pose a challenge for both DCOT and Method 9 observers, humans can readily move to a better position for observation than a camera which needs to be mounted and calibrated.

EPA further misconstrued the McFarland Report findings by stating that "[i]n general, the study found that EPA Method 9 and DCOT were comparable in determining opacity of fugitive emissions."[107] This is not accurate. In fact, the study reported the opposite: "on average, field results indicated that the DOCS technology *consistently yielded opacity values that were greater than those reported by Method 9-certified human opacity observers*."

Further, in direct contrast to EPA's assertion, the study also found that "[a]t a 300 ft off-set distance, the performance between the DOCS technology and Method 9 in determining visible opacity generated large inconsistencies." This is particularly important because most Method 9 observations at EAF steel mills are taken from approximately this distance. Due to the height of many meltshops (100 -150 feet or more) and the angle of the sun requirements to conduct a Method 9 observation, Method 9 readers are often 200-300 feet away or further from the meltshop roofline edge.

---

[105] EPA also has failed to acknowledge, both in the current proposal and in the IIS NESHAP rulemaking, that the Ferroalloys industry is not actually using DCOT (Method Alt-082), but instead is using Method 9 exclusively. In fact, in 2017, EPA approved use of Method 9 as an alternative method to DCOT for the Ferroalloys NESHAP. (Letter from Steffan M. Johnson, Leader, Measurement Technology Group, EPA, to Laure Guillot, Eramet Marietta Inc., and Laura K. McAfee, Beverage [sic] & Diamond (June 8, 2017)) In that decision, EPA stated that "[t]he sole vendor no longer offers [an ASTM compliant system off the shelf]; "[t]he DCOT software provided by the sole vendor is not yet fully developed for use"; and "[t]he costs of implementing [the method] are unpredictable." (*Id*. at 2) To our knowledge, none of those factors have changed, and they are equally applicable and relevant to the EAF steelmaking NSPS.

[106] EPA, Summary of Public Comments and Responses on Reconsideration of the Ferroalloys Production NESHAP Final Rule, at 21 (EPA Docket No. EPA-HQ-OAR-2010-0895).

[107] *Id.*

For all the foregoing reasons, it is inappropriate for the Agency to push DCOT as an alternative compliance measurement mechanism for the NSPS shop opacity limits at this time. Before mandating use of a compliance assessment method, it is the Agency's responsibility to demonstrate that the method is accurate, not simply capable of providing documentation. EPA's failure to do so – particularly given the Agency's acknowledgment of the method's limitations – is arbitrary and capricious.

III. THE PROPOSED "FACILITY-WIDE" PM LIMIT IS BASED ON SPECULATION, NOT SUPPORTED BY ANY REASONED ANALYSIS, AND UNNECESSARILY COMPLICATES COMPLIANCE

EPA proposes to replace the 0.0052 grains per dry standard cubic foot ("gr/dscf") stack limit for filterable PM with a proposed prohibition on EAF/AOD emissions that "exit from control devices at the facility and contain particulate matter as a total for the facility in excess of 79 mg/kg steel produced (0.16 lb/ton steel produced) for the facility."[108]

EPA justifies the new approach based on the following:

> A production-based standard is considered a better metric than one based on air flow, because the latter format allows dilution air to artificially lower the measured PM concentration effect so that the test results are not a reflection of the true PM emissions from the EAF. In addition, facility-wide total control device PM emissions would alleviate the potential disparity in control device emissions between low and high-loading control devices, such as that for control devices for primary vs. secondary emissions, as well as for well-operated vs. inefficiently-operated control devices. Also, by dividing up the emissions into separate baghouses, each falling under the same NSPS PM limit, there is no accounting for the total PM emissions from the facility. Most metal production industries have production-based air pollution limits.[109]

The preamble to the proposed rule further hypothesizes:[110]

> The emissions, and, hence, collected PM, from baghouses that control only secondary emissions can be much lower than the other two types of baghouses, as seen in the EAF dataset where the baghouse with the lowest PM emissions controlled only secondary emissions. (5) Because of the inherent lower baghouse PM input (loading), secondary baghouses can be operated inefficiently without exceeding the current NSPS limit, which is expressed in the units of mass PM per unit of control device exhaust air. In addition, where there is a standard in terms of mass PM per unit of total exhaust air, baghouse dilution air (added to EAF exhaust air) can be increased with the effect of lowering measured baghouse PM emission concentration and disguising the true performance of the baghouse.

---

[108] Proposed 40 C.F.R. § 60.272b(a)(1).

[109] *Cost Analysis* at 2-3 (emphasis added).

[110] 87 Fed. Reg. at 29,715.

> The EPA is proposing to set a facility-wide PM limit instead of a limit that applies to each control device (the format of the current standard), because we think this form of standard will result in better control and provide greater assurance of compliance. Most importantly, if EAF emissions can be divided up into separate baghouses, for practical purposes or otherwise, with each device falling under the same NSPS PM limit, there is no accounting for the total PM emissions from the facility. A facility-wide total control device PM emissions limit in units of pounds of PM per ton of steel produced also would alleviate the potential disparity in control device emissions between low-and high-loading control devices, such as that for control devices for primary vs. secondary emissions, as well as for well-operated vs. inefficiently-operated control devices that both operate below the individual baghouse limit.

Curiously, for the Subpart AAa rulemaking, EPA reached the exact *opposite* conclusion and rejected a production-based (or mass-based) standard in favor of the Subpart AAa concentration-based limit:[111]

> A process weight format is based on a direct relationship between the quantity of pollutant emitted and the amount of input material consumed or product produced. **Because of wide differences between EAF and AOD shops in operating procedures, such as the length of the steel production cycle, grade of steel produced, control technologies, vessel capacities, and other operating parameters, a simple direct relationship between mass emissions and steel production does not exist**. Therefore, a process weight format was not selected for control devices regulated by the proposed standards.
>
> Methodology to measure the concentration of emissions discharged to the atmosphere from control devices is readily available and well demonstrated. Concentration measurements are obtained directly from the stack emission test data. A concentration standard can be met equally well by a large or a small shop and by carbon and specialty steel shops. Consequently, a concentration format (i.e., mass emissions per unit volume of gas) was selected for control devices regulated by the proposed standards to ensure control of captured process and fugitive emissions.

EPA provides no explanation for the change in its position and fails to address, or even mention, the very good reasons the Agency had in 1983 for adopting the current grain-loading standard. Indeed, the data on which EPA relied in proposing the "facility-wide" production-based standard plainly demonstrates that the conclusion the Agency reached in 1983 remains correct; the current concentration-based limit of 0.0052 gr/dscf is in no way correlated to EPA's proposed production-based limit of 0.016 lb/ton of steel produced. And, as we discuss in these comments, EPA's calculations linking the existing 0.0052 gr/dscf limit to an equivalent 0.020 lb/ton limit is so flawed that it should simply be set aside. Thus, there is no basis to demonstrate the achievability of the proposed new 0.016 lb/ton limit, and no basis to assess the cost effectiveness of the new standard.

[111] 48 Fed. Reg. at 37,347 (emphasis added).

A. EPA's Proposed Production-Based Limit Cannot Be Correlated with the Existing Concentration-Based Limit

Establishing whether there is any correlation between EPA's proposed production-based limit with the current concentration-based limit requires an examination of performance test reports with sufficient data to identify and compare the facility's production-based and concentration-based emissions, recognizing how each of these values is estimated from other primary measurements. Fortunately, EPA's docket contains test reports for 50 baghouses at 30 facilities with production-based and concentration-based emissions data.[112]

Yet, inexplicably, EPA wholly ignored the vast majority of this data and instead established a conversion ratio based on emissions from a single facility.[113] EPA's decision to disregard the majority of its data was informed by a two-step process.

First, EPA eliminated data from 17 of the 30 facilities because they did not achieve 0.000 percent opacity during their performance test. According to the Agency:

> [I]t was important to use data from EAF facilities with 0.000 percent melt shop opacity to determine BSER for control device PM emissions because facilities that control their melt shop opacity to 0.000 percent opacity are collecting more PM (specifically, from the melt shop) than facilities that have a nonzero melt shop opacity and, therefore, also are sending more PM to their control devices. Consequently, EAF facilities with 0.000 percent melt shop opacity are expected to have higher control device PM emission rates on average compared to EAF facilities with greater than 0.000 percent melt shop opacity. [114]

As the Steel Associations noted in Section II of these comments with regard to EPA's proposed zero percent opacity standard, the data do not support EPA's simplistic presumption that facilities with higher baghouse emissions capture shop PM more effectively and therefore have zero percent shop opacity. Even if the data supported EPA's speculation that facilities with higher baghouse emissions have lower shop opacity, that would not justify EPA discarding the majority of the performance test reports that contained both performance-based and concentration-based emissions data. The test reports could have been used to test whether there was a relationship between performance-based and concentration-based limits – *i.e.*, whether these two metrics of emissions at the baghouse exhausts had a robust relationship. Reasonably discerning that relationship requires EPA to use as much data as possible, even though EPA surmised (baselessly) that some of those facilities had lower capture efficiency. To state the obvious, when discerning whether two variables are related, more data are better than less data. As such, EPA's decision to ignore the majority of its available performance test data was arbitrary and quite wrong from an analytical perspective.

---

[112] *Emissions Memorandum* at 3.

[113] 87 Fed. Reg. at 29,718.

[114] *Cost Assessment* at 11.

Next, EPA plotted the production-based emissions for the remaining 13 facilities on a chart, reproduced below, which inexplicably depicts the relationship between just the facilities' estimated production-based (lb/ton) emissions (y axis) against their production-based emissions rate rank (x axis). There is no mention of the concentration-based limit. It is unclear what relevance EPA ascribed to a relationship between the mass of PM per ton the facilities emitted and the amount of PM per ton they emitted relative to the other 12 facilities expressed in that form, but EPA nonetheless concluded that the "best fit" for the resulting curve was an exponential line, which EPA then used to plot two additional "exponentially fit" data points.[115]

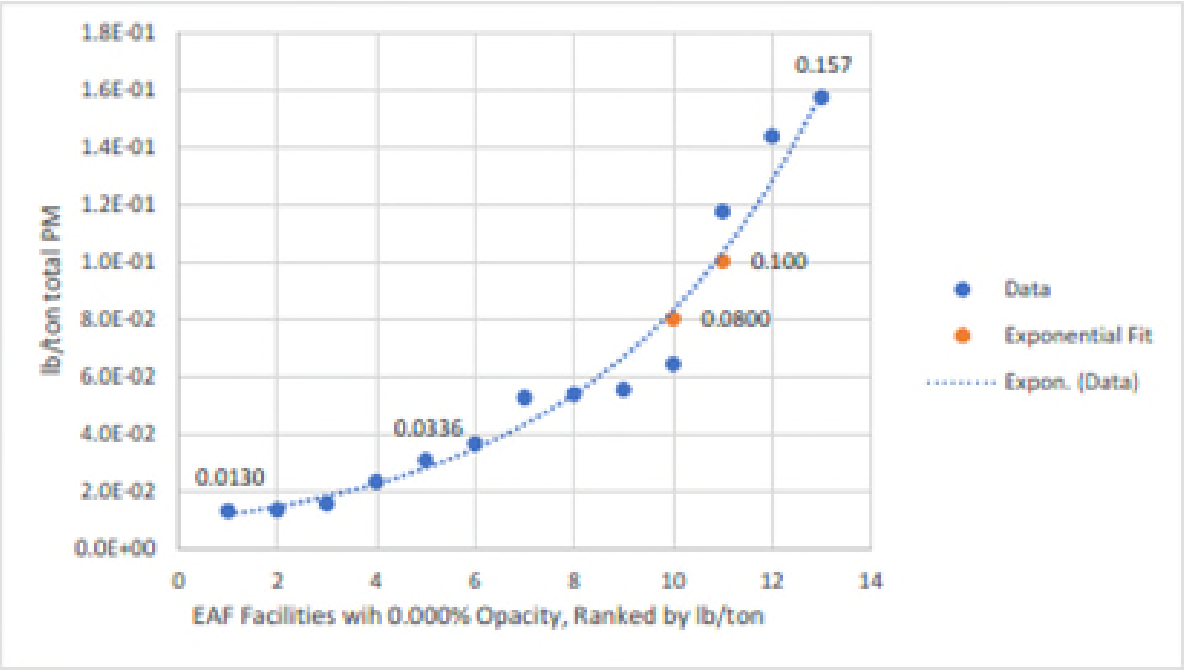

Figure 3. Total facility PM lb/ton ranked for 13 EAF facilities with 0 percent opacity.

EPA then created a table with baghouse air-to-cloth ("A/C") ratios for 70 IIS industry baghouses with the A/C ratio on the y axis and the rank of each of the 70 IIS baghouses' A/C ratio on the x axis.[116] The A/C ratios of these baghouse types are quite different. On this table of IIS baghouse A/C ratios, EPA then evenly spaces the five model facilities from the prior table (3 actual facilities and two modeled from the "exponential curve") along the IIS A/C ranking so that the facility with the lowest PM emissions was

[115] *Cost Assessment* at 11.

[116] *Cost Assessment* at 12 – 13.

situated on the IIS baghouse with the highest A/C ratio, the facility with the highest PM emissions was situated near the IIS baghouse with the lowest A/C ratio and the two remaining model facilities were evenly spaced according to PM emissions in between.

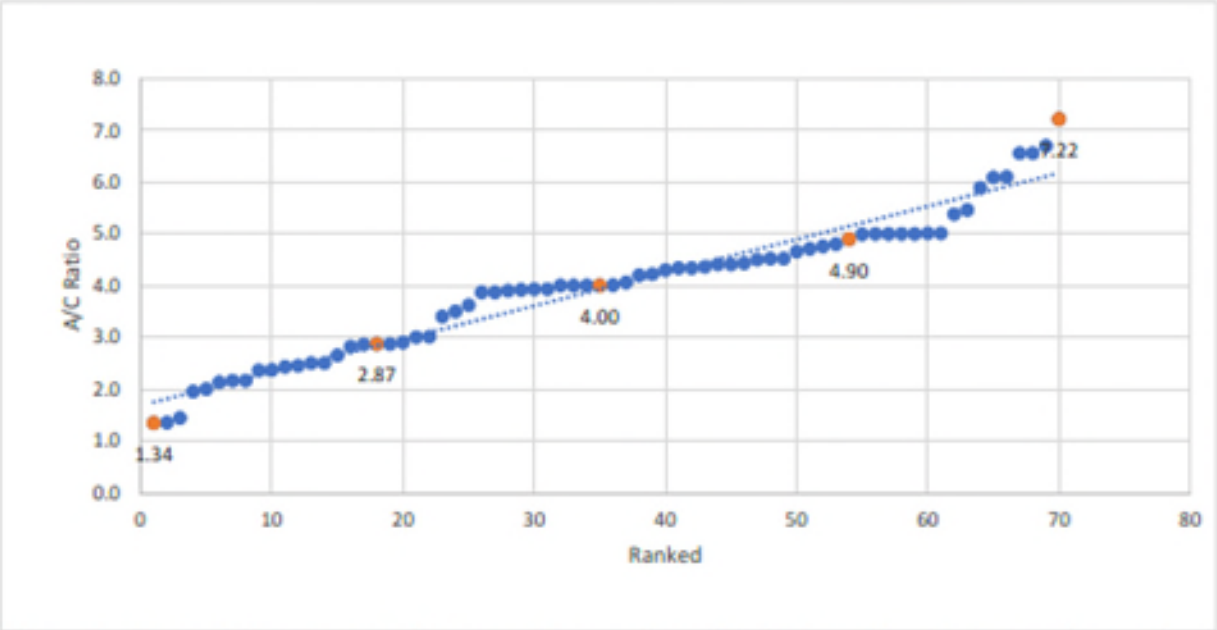

Figure 4. Air-to-cloth ratio from Integrated Iron and Steel facilities with endpoints and quartiles marked.

EPA offers no explanation why the IIS baghouse data was relevant to EAF baghouse controls in the first place or why EPA presumed that relative rank placement of five facilities along a ranking of IIS baghouse A/C ratios allowed EPA to presume those facilities' PM emissions were based on control through a baghouse with the same A/C ratios. These are arbitrary and unnecessary contortions. Moreover, the use of IIS data is inexplicable because EPA has in its possession the A/C ratios for many plants with EAFs.[117] This information was available to EPA in the docket for the Subpart YYYYY NESHAP for EAFs – the same docket that supplied the majority of the performance test data EPA used in this proposal.[118]

[117] *See* Summary of EAF Survey Responses (June 2005), EPA-HQ-OAR-2004-0083-0068.

[118] EPA-HQ-OAR-2004-0083.

In fact, EPA even summarized the A/C ratios for the EAF baghouses that were operated during these performance tests in the following table:[119]

	Air: cloth ratio (ft/min)
Average	3.0
Median	2.7
Minimum	1.4
Maximum	6.0

EPA's analysis ignored this data and instead used the unrepresentative IIS A/C ratios to derive the following model plant parameters that are directly contradicted by the actual EAF baghouse parameters in EPA's possession.

Table 3. Model Plant Parameters Used in the Analysis For a Facility-wide Baghouse PM Limit

Model Plants	PM Emission Rate	A/C Ratio
	lb/ton	ft/min
A	0.013	1.3
B	0.034	2.9
C	0.08	4.0
D	0.10	4.9
E	0.16	7.2
Baseline	0.20	8.0

As would be expected given EPA's illogical overlay of unrelated IIS A/C data on five model EAFs' stack emissions (three actual and two extrapolated), EPA's derived average, median, minimum, and maximum A/C ratios are all incorrect.[120] As would also be expected, the derived A/C ratios misstate the actual A/C ratios reported by the three model facilities for which EPA had actual performance test data (Model Plants A, B, and E). For instance, Model Plant E is the North American Stainless facility in Ghent, Kentucky ("NAS Ghent"), which operates four baghouses. For those four baghouses, the facility reported to EPA A/C ratios of 4.1, 4.5, 4.5, and 5.0 ft/min[121] - none of which are close to EPA's erroneously derived A/C ratio of 7.2.

[119] Summary of EAF Survey Responses at 3.

[120] EPA's five model plants have an average A/C ratio of 4.1, a median ratio of 3.9, a minimum ratio of 1.4, and a maximum ratio of 7.2.

[121] EPA-HQ-OAR-2004-0083-0364.

EPA's disregard for actual performance test data and baghouse parameters is particularly relevant with respect to NAS Ghent because, for the purpose of attempting to correlate production-based and concentration-based limits, EPA inexplicably ignores all the baghouse data (*i.e.*, the IIS data as well as the data from 29 of the 30 EAF mills) and relies solely on NAS Ghent (Model Plant E) to derive an equivalence between the concentration and production based limits as follows.

Based on its calculations (which contain one fundamental error that we note later), EPA estimated that the concentration of PM from testing at NAS Ghent (which has two EAFs and two AODs, with four total baghouses) was 0.0040 grains/dscf, the highest such value for the zero percent shop opacity subset of mills. Excluding all of the other data even from this zero percent opacity subset, EPA then noted that 0.0040 gr/dscf represents 77% of the standard (*i.e.,* 0.0040/0.0052 = 0.77). It then used this value (77%) and NAS Ghent's reported lb//ton test value (0.16 lb/ton) to arrive at the 0.20 lb/ton value as the equivalent mass-based limit corresponding to the 0.0052 concentration-based limit.

EPA's approach is flawed on a conceptual level as well as in implementation. Conceptually, it makes no sense for EPA to derive its industry-wide relationship between the current concentration-based limit and its proposed mass-based limit by relying on data from just a single facility, neglecting relevant data from the other 29 facilities for which EPA has pair-wise concentration and production data. EPA simply picked NAS Ghent because the Agency's calculated concentration-based value for the whole plant (*i.e.*, all baghouses) of 0.0040 gr/dscf was the closest to the existing NSPS 0.0052 gr/dscf PM limit. Even if this were true, when developing a correlation between two variables, it makes no sense to simply use a scale derived from one data point. And, it is incomprehensible to derive a scale using a single data point when a significantly larger body of pair-wise data are available.

EPA's analytically infirm approach was then compounded by a fatal computational error. We have reviewed EPA's derivation of the 0.0040 grain/dscf concentration value for NAS Ghent and believe that it is wrong. As noted above, NAS Ghent has four baghouses. EPA's background tables identify the individual concentration-based emissions at each of these four baghouses. However, in deriving the total plant *concentration* limit, EPA erroneously *adds* these four separate baghouse concentration values. Concentrations *are not additive*. In the same data analysis, we note that EPA correctly added the mass-based (*i.e.*, lb/ton) values from each baghouse test – and that is proper because mass is additive. This specific error of adding concentrations from multiple baghouses infects not just the analysis of NAS Ghent, but also every multi-baghouse facility that EPA analyzed. Thus, the starting point of EPA's scaling attempt (*i.e.,* NAS Ghent's 0.0040 gr/dscf value) is wrong. EPA's analysis therefore fails on both conceptual and implementation grounds.

We have not undertaken a revised analysis – the proper plant-wide concentration, regardless of the number of baghouses and the relationship of the entire universe of plants where we have both concentration and mass-based data (and, without neglecting the zero percent meltshop opacity subset) – because we fundamentally disagree with EPA, for reasons stated in these comments, that a mass-based limit is proper to begin with. But, if EPA were to persist with this approach, we believe that all of EPA's analyses supporting a mass-based limit corresponding to 0.0052 gr/dscf need to be redone. In doing so, EPA would need to: (i) include all EAF test data for which it has pairs of concentration and mass-based values for the

same test; (ii) verify that the plant-wide concentration values are properly calculated (*i.e.*, not added, when multiple baghouses are present); (iii) ensure that the mass-based limits for each plant are estimated on a consistent basis (*i.e.*, using the same form of production tons in the denominator since plants can use a mix of metrics for production tons – such as melted tons, cast tons, *etc.*) – a step that is simply missing in EPA's current analysis; and (iv) then derive the proper correlation between the concentration and production values in order to use that correlation to determine the production-based value corresponding to the 0.0052 gr/dscf concentration limit or conclude, if that data so indicate, that there is not a strong correlation.

B. EPA's Proposed Approach Ignores the Differences Among EAF Steel Mills that the Agency Previously Recognized

EPA does not acknowledge or address the fundamental fact that a "facility-wide pounds per ton" production or mass-based standard ignores the substantial differences among EAF steel mills that the Agency explicitly noted in 1983: EAF and AOD mills vary widely on basic factors such as the length of the heat cycle, tonnages and grades produced, and furnace/AOD capacity, which directly bear on the particulate emissions per ton of steel produced. It is both unfair and inconsistent with BSER, as discussed in Section I, to hold a small specialty steel EAF facility, with low tonnages and more time-intensive steel refining requirements, to the same production-based standard as a facility that produces 10-times or more steel with much shorter heat times (*i.e.*, two facilities with vastly different production rates).

A compliance method based on PM per ton of steel produced does not take into consideration variation in heat times and tonnages produced, which vary considerably depending on the product grade of steel and the mix of such products at various mills. Some carbon EAF mills produce high tonnages in relatively short heat times, while specialty EAF steel facilities produce much smaller tonnages over heat times that can be 2-3 times as long. As EPA noted in developing the Subpart AAa standards: "The production of steel in an EAF is a batch process where 'heats' or cycles range from 1 to 5 hours, depending upon the size and quality of the charge, the power input to the furnace, and the desired quality of the steel produced."[122]

Currently, the form of the PM standard is expressed as grains (or mass of PM) per dry standard cubic feet of the exhaust flow. In order to convert this to the pounds (or mass) per ton of steel produced in the meltshop, one has to multiply the grains/dscf by the dscf/ton or exhaust flow per unit of steel production. Unfortunately, this dscf/ton factor is highly dependent on many variables such as the size of the EAF, the total energy input into the EAF and the source of the energy, including the non-electrical energy inputs such as the amounts of natural gas and oxygen used, the grade of steel being made, the total heat time and the durations of the various modes such as melting and refining during the heat, the quantity of "hot heel" practice for the shop, and many other variables – all of which can vary from heat to heat. As such, unlike the relationship between exhaust flow and combustion variables in other source types (such as fossil fuel boilers) where the relationship between exhaust flow and heat input is stable and depends solely on the fuel type (called an F-factor) this is not the case in an EAF meltshop. In addition, the ability of the control

[122] *1982 BID* at 3-19.

device (*i.e.*, the baghouse) to remove PM is related more to the air flow, filter surface area (*i.e.*, the A/C ratio noted prior), and filter composition of the baghouse, rendering grain loading a better metric than the tons or production basis for the form of the standard.

Given the significant variability associated with the dscf/ton parameter in any meltshop, we do not believe that EPA can set a limit using the lb/ton form of the standard without analyzing the variability of this factor and then properly accounting for it in setting the stringency of the standard at the same level as the grains/dscf standard. We are confident based on the discussion above that if EPA were to properly attempt to deduce the relationship between concentration- and mass-based values derived from stack test data, using the four-step approach noted prior, the Agency would see a poor correlation between these two metrics.

Moreover, EPA advances speculative arguments to justify the proposed production-based standard:[123]

> (1) <u>EPA suggests that "secondary baghouses can be operated inefficiently without exceeding the current NSPS limit"</u>: This assumption is false and fails to reflect the fact that secondary baghouses are operated to control fugitive emissions (such as from the EAF during charging and tapping) and emissions from other processes in the melt shop (such as from the ladle metallurgy station or "LMS"). Facilities operate these secondary emission controls as efficiently as possible to maintain visibility within the melt shop and a safe working environment. In contrast, all baghouses that receive primary emissions from the EAF or AOD are operated as efficiently as possible not only to meet the concentration-based grain loading standard but to minimize the amount of fugitive emissions for secondary baghouses to control.
>
> EPA argues that the proposed approach provides equal terms for facilities with different baghouse situations (*e.g.*, one baghouse for all emissions vs. facilities with a primary and secondary baghouse). EPA appears to believe, erroneously and baselessly, that the second baghouse is utilized to dilute the level of PM that goes to the primary baghouse. As one may reasonably insinuate from the utter absence of any supporting data, this contention is incorrect. Secondary baghouses are not employed to control furnace emissions; they are used to evacuate dust from the shop (during charging/tapping; for worker safety and to control fugitive emissions from a variety of potential sources). In some cases a second baghouse is used primarily for the LMS or for other PM-emitting sources within the meltshop as well.
>
> EPA also assumes (again without support or explanation) that secondary emission controls are operated inefficiently because the NSPS limit is too high. Secondary baghouses are not intended to address compliance with the PM limit, which is based on performance of the primary emission control system/baghouse which operates during the melting/refining stages (40-60 minutes). Secondary baghouses collect the majority of PM that goes to such baghouses during charging (less

[123] 87 Fed. Reg. at 29,715.

than 1 minute -3 minutes) and tapping (4-6 minutes), the period when the DEC is not engaged, as well as from other operations (LMS) to keep the melt shop clear.

(2) EPA posits, without any supporting evidence that "baghouse dilution air (added to EAF exhaust air) can be increased with the effect of lowering measured baghouse PM emission concentration and disguising the true performance of the baghouse": This is pure conjecture that is wholly unsupported by any evidence in the rulemaking record. In fact, EPA's hypothesized concern is already addressed by the General Provisions of the NSPS regulations that prohibit "circumvention" of an applicable standard, including banning "the use of gaseous diluents to achieve compliance with an opacity standard or with a standard which is based on the concentration of a pollutant in the gases discharged to the atmosphere."[124] Accordingly, the gamesmanship that EPA conjures as a justification for the proposed change already is prohibited under existing NSPS regulations.

More fundamentally, it is not operationally helpful to manipulate the baghouse in the manner EPA imagines and the Steel Associations are not aware of any plants that do so. EPA's proposed justifications are simply hypothetical theories that are wholly ignorant of operational realities and offered without any evidence or data. In short, EPA speculates (without citing a single example in support of its hypothesis) that facilities can "game the system" by diluting the denominator in the gr/dscf emission limit by adjusting baghouse dilution air.

As an initial matter, this argument is highly exaggerated given that the volume of air coming from the main evacuation system dwarfs the amount of possible dilution air. Dilution air is usually used for cooling intake air to the baghouse, which is essential to maintaining baghouse functionality.[125] Moreover, attempting to manipulate dilution air to somehow improve compliance is not done for very good reasons: Dilution air negatively affects the performance of the baghouse and the overall performance of the melting process along with possibly degrading operating components of the main melting equipment. Adding unnecessary dilution air would minimize baghouse efficiency and have the effect of short-circuiting the ventilation system, thereby causing the baghouse to perform poorly for maintaining the DEC control and meltshop fume control. This would result in a dustier meltshop, be detrimental to worker safety, and increase the need for secondary emission controls. Further, operating in this manner would increase the need for larger exhaust rates unnecessarily as well. In fact, all efforts are made to minimize dilution air getting into the meltshop. In sum, there is no justification or data provided to support the Agency's hypothesis in the record.

EPA's argument suggests that having high flow rates is inappropriate and is being done to cheat the system, when in fact higher flow rates should be considered desirable because it shows that the

[124] 40 C.F.R. § 60.12.

[125] Also, the gap in the fourth hole of an EAF allows air to combine with the gas stream for purposes of combusting carbon monoxide (CO) into carbon dioxide. Under EPA's approach, a move to eliminate such "dilution air" would have the adverse effect of decreasing CO controls.

evacuation system is operating more efficiently and is removing PM as it is designed to do. If the control device meets a grain loading performance standard that is all the better; it means that the system it is performing as it should. Flow rates and total facility emissions are addressed through other EPA programs, namely New Source Review.

(3) EPA claims that if a facility has separate baghouses "there is no accounting for the total PM emissions from the facility" and that a "facility-wide total control device PM emissions limit in units of pounds of PM per ton of steel produced also would alleviate the potential disparity in control device emissions between low-and high-loading control devices, such as that for control devices for primary vs. secondary emissions, as well as for well-operated vs. inefficiently-operated control devices that both operate below the individual baghouse limit":

This makes no sense. There "is accounting" for the total PM emissions from the facility when using concentration based limits. In fact, EPA has multiple test reports that show both values. The rest of EPA's comment above is confusing because the "potential disparity" that EPA mentions is irrelevant. As long as emissions from the EAF are being properly captured and treated in (as many) baghouses, we fail to see the relevance of "parity" between baghouses. If EPA believes, for no stated reason, that the performance of one (say, the primary baghouse) is influenced by the presence or performance of the secondary baghouses or other emission controls, that has no technical basis. There is no incentive for facilities to operate the primary baghouse inefficiently. And, as a practical matter, facilities cannot, on-the-fly simply redirect exhaust gas streams from one baghouse to another.

(4) EPA concludes that the proposed pounds-per-ton facility-wide limit will "result in better control and greater assurance of compliance": This too is incorrect. In addition to the reasons noted above regarding the inappropriateness of a "pound per ton" approach for an industry sector with highly varying levels of production tonnage or capacity, as well as highly different heat times, and refining requirements, the proposal makes compliance demonstration unnecessarily complicated. Under the current standard, compliance is readily demonstrated through Method 5 monitoring of the stack on the primary control device/baghouse. This is a direct measurement of the filtering ability of the baghouse. Under the proposal, facilities would be required to track tonnages produced during stack tests and match those to emissions data.

The proposed (and erroneous) EAF/AOD 0.16 lb/ton PM limit unnecessarily complicates compliance testing by over-measuring results, especially when many EAF/AOD baghouses also control non-EAF process units, including LMS whose emissions are included in the baghouse compliance tests as the LMS are part of the EAF steelmaking sequential steelmaking process (LMS are not turned off during compliance testing as they are a necessary part of the sequential process).

Crucially, in contrast to EPA's assertion that a "facility-wide" PM limit will result in "greater assurance of compliance," the opposite is in fact true: EPA's proposed approach will make obtaining vendor guarantees on baghouse performance difficult or impossible. Vendors have no control over the tonnage of steel produced or how the steel tonnage estimate comports with the duration of the PM measurement.

Under the current approach, vendors can guarantee that the filters/control device have a specific removal rate (*i.e.*, vendors can only guarantee the difference between the clean and dirty side of the bag). Obtaining such guarantees is what gives facilities comfort that the equipment they purchase will perform such that compliance is assured. Such comfort is not possible with the Agency's proposed "facility-wide" PM limit. Notably, in the 1984 rule adopting the Subpart AAa NSPS, EPA recognized the importance of vendor guarantees in achieving compliance.[126]

Accordingly, to ensure compliance, performance must be measured at the stack using the grain loading approach. Again, as with other proposed changes noted above, we are not sure what is "broken" that EPA seeks to "fix" via its proposal.

IV. EPA ILLEGALLY PROPOSES TO IMPOSE RETROACTIVELY NEW NSPS COMPLIANCE STANDARDS ON FACILITIES THAT ARE NOT NEWLY CONSTRUCTED, RECONSTRUCTED, OR MODIFIED AFTER THE DATE OF THE PROPOSAL

The proposed rule would require companies that currently meet the Subparts AA and AAa requirements – and which may not trigger the new Subpart AAb in the future – to comply retroactively with fundamentally different emission and compliance standards, including (1) shop opacity requirements during "charging and tapping, or during the period established to have the greatest potential for uncaptured emissions to escape the melt"[127] rather than "melting and refining"; (2) installation, calibration, and maintenance of multiple types of operational monitoring systems[128] instead of utilizing one such mechanism as currently required; and (3) requiring BLDS on all baghouses.[129] As detailed in Section I.B of these comments, such retroactive changes to the compliance standards are at odds with the structure, intent, and mandate of the NSPS program, which, as EPA states in the preamble to the proposed NSPS Revisions, is to establish standards of performance based on "the best system of emission reduction … adequately demonstrated" and to apply those standards "to facilities that begin construction, reconstruction, or modification after the date of publication of the proposed standards."[130]

---

[126] 49 Fed. Reg. at 43,840 ("However, the Agency has determined that the mass standard should not be lowered. This is because it was determined that, to guarantee fabric filter compliance with [a more stringent grain loading standard], vendors might increase capital costs of fabric filters as much as 25 percent [docket references omitted]. This increase in costs would result from the increased air-to-cloth ratio and other designed factors needed to ensure continuous compliance with a more stringent emission limit.").

[127] Proposed revised sections 60.273(d) and 60.273a(d) would be altered to require shop opacity observations to be taken "during charging or tapping, or during the period established to have the greatest potential for uncaptured emissions to escape the melt shop," rather than "when the furnace is operating in the meltdown and refining period."

[128] Proposed revised 40 C.F.R. § 60.274(b), § 60.274a(b).

[129] Proposed revised 40 C.F.R. § 60.273 (c), § 60.273a(c).

[130] 87 Fed. Reg. at 29,714.

The preamble to the proposed rule misleadingly characterizes these fundamental revisions to the existing NSPS standards (Subparts AA and AAa) as "minor" and "editorial and clarifying changes."[131] This is not an accurate description of the proposed revisions, which are, in fact, dramatic deviations from the current standards and would require substantial and costly additional modifications to a meltshop facility and furnace operations. Incredibly, there is no further justification for the re-writing of the standards beyond this misleading characterization. It is difficult to imagine a more arbitrary and fatally flawed "justification" for a regulatory proposal. In addition to violating the basic premise of NSPS revisions, including the essential fact that such revisions apply only to facilities that qualify as new, modified, or reconstructed *AFTER* proposal of the NSPS requirements, as explained in Section I.B, by entirely failing to provide any substantive explanation of the changes, the proposal blatantly ignores the fundamental tenant that agency rulemaking is arbitrary and capricious if the Agency fails to provide a reasonable explanation for the action.[132]

EPA must withdraw the proposed revisions regarding compliance measurement for shop opacity limits, operational monitoring requirements, and BLDS for modular or multi-stack baghouses, as discussed further below.

A. Requiring Measurement of Shop Opacity During "Charging and Tapping" Is a Fundamental Change to the Standard

As discussed in Section I.B of these comments, in adopting NSPS revisions it is impermissible for EPA to ratchet up the stringency of existing NSPS standards.

EPA proposes to require daily observations of "Shop Opacity" to be conducted "during charging or tapping, or during the period established to have the greatest potential for uncaptured emissions to escape the melt shop."[133] Subparts AA and AAa explicitly require these observations to be conducted during the "melting and refining" period.[134] As evidenced by the Agency's new text shifting the requirement to when there is the "greatest potential for uncaptured emissions to escape," EPA clearly believes that changing the timing of compliance in this manner will increase the stringency of the standard. This language can only be interpreted as intending to shift the point of compliance from the time period when the primary

[131] *Id*. at 29,721 and 29,726.

[132] *New York v. EPA*, 964 F.3d 1214, 1222 (D.C. Cir. 2020).

[133] Revised proposed 40 C.F.R. § 60.273(d), § 60.273a(d), § 60.273b(d).

[134] *See, e.g*., 40 C.F.R. § 60.273(d), § 60.273a(d) ("Shop opacity observations shall be conducted at least once per day when the furnace is operating in the meltdown and refining period."). *See also* 48 Fed. Reg. at 37,348 ("Method 9 visible emissions observations would be required once per day of operation (up to five times per week) while the EAF or AOD vessel is in the meltdown or refining phase of a heat cycle.").

emission control is operational (during melting and refining when the DEC is in place) for a long duration during the heat cycle to a much shorter time period where fugitive emissions may be greater.[135]

Indeed, in the Subpart AAa rulemaking, EPA makes clear that emissions during charging are more difficult to control than during melting and refining:

> Charging the open furnace produces emissions that are difficult to control. The intensity level of emissions during charging varies depending on the cleanliness and the makeup of the scrap. Most charging emissions result from (1) vaporization of oil, grease, or dirt introduced with any turnings, borings, or chips; (2) oxidation of organic matter that may adhere to the scrap; and (3) the vaporization of water from wet or icy scrap.… Backcharging produces a large eruption of reddish-brown fumes with a strong upward thermal driving force. The emissions during backcharging are higher than during the initial charge because of the intense reaction that occurs due to the heat of the molten steel bath in the furnace.[136]

EPA was well-aware in adopting Subpart AAa that the level of potential fugitive emissions may be greater during charging and tapping when the DEC is not (and, for most mills, cannot be) engaged: "During times the furnace is tilted for tapping or the furnace roof is rotated aside for charging, the DEC system is ineffective, and fugitive emissions escape from the furnace into the melt shop."[137] In contrast, during melting and refining, EPA explicitly found that "[f]urnace evacuation with direct-shell evacuation control (DEC) can control most of these emissions by maintaining a slightly negative pressure within the furnace."[138]

EPA's proposal to require fugitive emission observations when the DEC is not engaged or when emissions otherwise "have the greatest potential" to be uncaptured also is at odds with the original purpose of viewing the shop opacity observation requirement as a means to ensure proper operation of the primary control system (DEC and baghouse). As EPA stated in proposing the Subpart AAa standards: "The purpose of this opacity monitoring requirement is to ensure that the fabric filter is being properly operated and maintained."[139]

Now, however, EPA appears to view the shop opacity observation requirement as a means to enforce a fugitive emissions limit in its own right (and as a surrogate for making the meltshop a total enclosure) and not as an indicator of the proper operation of the primary control system. As discussed above, this is a fundamental change to the purpose, substance, and stringency of the existing shop opacity standard. For

---

[135] The Steel Associations do not concede that fugitive emissions are, in fact or always, greater during charging and tapping, at most mills.

[136] *1982 BID* at 3-20, 3-21.

[137] 48 Fed. Reg. at 37,341.

[138] *1982 BID* at 3-23.

[139] 48 Fed. Reg. at 37,338. Likewise, in the preamble to the final Subpart AAa rule, EPA noted that "The opacity of visible emissions exiting the shop roof monitor is a good indicator of the performance of the process and fugitive emissions capture systems." 49 Fed. Reg. 43,838, 43,840 (Oct. 31, 1984).

some facilities, EPA's proposal to change the shop opacity observation requirement from the "melting and refining period" to "charging/tapping/period with greatest potential for uncaptured emissions to escape the melt shop" may present a compliance issue. It may also require some facilities to re-engineer how they control emissions within the melt shop.

Accordingly, EPA's proposal may require facilities *that were designed to meet the Subpart AAa shop opacity requirements at the time of construction or modification* now undertake an engineering analysis and potentially other steps to ensure compliance with a different standard – *i.e.,* achieve six percent shop opacity during charging and tapping rather than during melting and refining.

As EPA has recognized,[140] the vast majority of EAF steel mills operate in a manner such that the primary emission control system (DEC) is operational only during the melting and refining phase. The DEC necessarily is disconnected during charging and tapping when the furnace roof is swung open to allow the introduction of scrap metal and other feedstocks (during charging) or to allow pouring of molten metal from the EAF (during tapping). By measuring shop opacity, as currently requiring in Subpart AAa, during melting and refining, rather than charging and tapping, EPA explicitly chose to adopt a shop opacity standard for Subpart AAa facilities during the period when the primary emissions control system was operational. Fugitive emissions that escape from the EAF during melting and refining (as well as charging and tapping) are controlled by secondary pollution equipment, such as canopy hoods and scavenger ducts.

B. Mandating Adoption of New Operational Monitoring Requirements that Have Been Optional is an Increase in the Stringency of the Subpart AA/AAa Standards (and are Unjustified for Subpart AAb)

EPA proposes to amend the Operational Monitoring requirements in 40 C.F.R. § 60.274 and § 60.274a to require "furnace cycle-dependent monitoring" in a manner that fundamentally overhauls the compliance requirements for Subparts AA and AAa. Moreover, at no time does EPA explain why requiring expanded operational monitoring for new and modified facilities under Subpart AAb is justified, despite the explicit departure from past EPA determinations that alternative monitoring was sufficient for NSPS purposes. For the following reasons (as well as those noted above in Section I.B), EPA must rescind the proposed changes to the operational monitoring requirements and maintain the alternatives currently provided in the existing standard for each of the NSPS Subparts (AA, AAa, and AAb), including measurement of fan amps and damper positions once per shift as an alternative to capture system flow rates, and the option to conduct VE observations in lieu of furnace static pressure monitoring.

Subpart AA required mills to demonstrate compliance with fugitive shop opacity limits by establishing parameters for furnace pressure (if using a DEC) and *either* (1) fan motor amperes and damper positions,

[140] *See, e.g.*, 48 Fed. Reg. at 37,341 ("During times the furnace is tilted for tapping or the furnace roof is rotated aside for charging, the DEC system is ineffective, and fugitive emissions escape from the furnace into the melt shop."). *See also 1982 BID* at 3-35, 3-36 ("Emissions generated at the furnace during periods when the furnace roof is closed (e.g., during melting and refining) and the primary emission capture device (e.g., DEC system, side draft hood) is operative are considered to be process emissions. Those emissions generated during periods when the furnace roof is open (e.g., charging) or when the primary emission capture device cannot operate (e.g., charging and tapping) are considered to be fugitive emissions.").

or (2) the capture system flow rates in each separately ducted hood. Once established, mills were required to maintain those parameters used during shop opacity compliance demonstrations. Method 9 was specified as the compliance measurement for the opacity of fugitive emissions. The Subpart AAa Amendments largely maintained the Subpart AA approach to monitoring compliance with fugitive opacity limits and that rulemaking process further emphasized the alternative nature of the monitoring requirements.[141] In 1999, EPA amended Subparts AA and AAa to allow use of daily Method 9 observations *as an alternative* to furnace static pressure monitoring, allowed facilities to locate the furnace static pressure monitor in the EAF or DEC duct prior to introduction of ambient air, and added control system volumetric flow rate monitoring *as an alternative* to monitoring control system fan amperage.[142]

Under the proposed NSPS Revisions, EPA now seeks to eliminate the alternative compliance approaches adopted for Subparts AA and AAa and mandate that many of the former options become additive requirements. For example, for the "Melting and Refining" furnace cycle:

- Operators would be required to monitor and record on a *continuous* basis the rolling 15-minute average furnace static pressure (if a DEC system is in use, and a furnace static pressure gauge is installed).[143] In contrast, Subparts AA/AAa impose this monitoring requirement "once-per-shift"

[141] 48 Fed. Reg. at 37,348 ("An alternative approach [to monitoring flow through each capture hood and furnace static pressure], however, is available to ensure proper operation and maintenance of the equipment installed to capture fugitive emissions. This approach involves monitoring parameters that are proportional to the flow through the fugitive emission capture hood rather than direct monitoring of the flow itself. Compliance with monitoring requirements could be achieved by maintaining an operating log of key operating parameters such as damper positions and fan amperes. No additional equipment would be needed to maintain operating logs of these key operating parameters because these parameters can be readily and directly observed. … Maintaining an operating log will ensure proper operation and maintenance of the equipment installed to capture fugitive emissions at a lower cost than direct monitoring of the flow through the equipment.").

[142] 64 Fed. Reg. 10,105 (Mar. 2, 1999) ("Changes to both rules are being made to add alternative requirements for the monitoring of EAF capture system…."); *Id*. at 10,107 ("The changes will not remove any of the rules' requirements, but will add alternative monitoring options that will provide owners and operators more flexibility in complying with the rules while not reducing environmental benefit.… These amendments will (1) add daily shop opacity observations as an alternative to monitoring furnace static pressure for furnaces with DEC systems, … (3) add control system volumetric flow rate monitoring as an alternative to monitoring control system fan amperage…") (emphasis added); *Id.* at 10,106-107 ("Concerns were raised to the CSI regarding the use of a pressure monitoring system in the free space above an EAF when it is equipped with a direct shell evacuation system. The free space above an EAF is subject to severe conditions of high temperature and dust. Several owners and operators have had problems with frequent plugging of the pressure monitoring sensor. Due to the location of the sensor, maintenance and repair can be both difficult and dangerous. Industry representatives sought a more practical means of monitoring. Following discussions and negotiations between the various subcommittee members, the subcommittee recommended daily visible emissions observations as an alternative to pressure monitoring. As discussed above, pressure monitoring provides an indirect indication of continued capture effectiveness. Daily visible emissions observations will provide direct evidence of continued capture effectiveness. The second concern regards the monitoring of fan amperage. Both subparts give the owners and operators the option of either monitoring flow rates in each separately ducted hood, or monitoring fan amperage in conjunction with damper positions. Fan amperage is used as an indicator of total flow rate. . . . [I]t was recommended that owners and operators be given the option to monitor total flow rate directly, rather than using fan amperage as an indicator.") (emphasis added).

[143] Proposed 40 C.F.R. § 60.274(b)(1)(i), § 60.274a(b)(1)(i), § 60.274b(b)(1)(i).

rather than on a "continuous basis." As discussed in Section I.B of these comments, changing monitoring to a continuous basis represents an increase in the stringency of the requirement and the underlying standard. Further, the proposal would delete the provision that states that a "furnace static pressure monitoring device is not required on any EAF equipped with a DEC system if observations of shop opacity are performed by a certified visible emission observer."[144]

Surprisingly, the proposal ignores EPA's 1999 rulemaking that amended the EAF NSPS standards to allow daily visible emissions monitoring as an alternative to installation of a furnace static pressure monitoring device. In that rulemaking, EPA clearly recognized that furnace static pressure monitors presented practical problems with maintenance and installation, and that daily VE observations were as good or better an indicator of control device capture efficiency:

> The free space above an EAF is subject to severe conditions of high temperature and dust. Several owners and operators have had problems with frequent plugging of the pressure monitoring sensor. Due to the location of the sensor, maintenance and repair can be both difficult and dangerous. Industry representatives sought a more practical means of monitoring.
>
> Following discussions and negotiations between the various subcommittee members, the subcommittee <u>recommended daily visible emissions observations as an alternative to pressure monitoring</u>. As discussed above, pressure monitoring provides an indirect indication of continued capture effectiveness. Daily visible emissions observations will provide direct evidence of continued capture effectiveness.…[145]

EPA does not address these well-known difficulties with installing, operating, and maintaining such monitors *on a continuous basis* in the harsh furnace environment. Those difficulties have not changed. At minimum, any requirement for furnace pressure monitoring would have to provide for the entirely foreseeable and regular down-time that would be needed to maintain such monitors. In addition, the electronics that would be used to transmit the pressure data on a continuous basis to a different location (where it can then be captured and recorded) also have to survive the same harsh environment. These are significant issues and a primary reason why the vast majority of EAF steel mills do not utilize furnace static pressure monitors to comply with the existing NSPS requirements, but instead utilize daily visible emissions observations.

Further, as discussed in Section VI.B, the significant costs of installing and, especially, maintaining furnace static pressure monitors are completely absent from EPA's analysis.

---

[144] Compare proposed and current 40 C.F.R. § 60.273a(d). Proposed Section 60.274a(f) continues to state that "[e]xcept as provided for under § 60.273a(d)," the EAF must install a furnace pressure monitoring device. However, as noted above, the pertinent provision of Section 60.273a(d) that provided for an alternative to "furnace static pressure monitoring" would be deleted, thereby mandating installation of a furnace static pressure monitoring device in all cases.

[145] 64 Fed. Reg. at 10,106 (emphasis added).

- Operators would be required to install, calibrate, and maintain a monitoring device that *continuously* records damper position(s).[146] The current NSPS impose this monitoring requirement "once-per-shift" rather than continuously. This provision would eliminate, without any explanation, the alternative to check fan amps "once-per-shift" in conjunction with recording damper positions, perhaps the most common compliance option utilized by existing EAF steel mills. As explained in Section I.B of these comments, before adopting a substantive shift in policy such as this, EPA must provide a rational explanation for the change, which is completely lacking here. EPA also fails to explain how recording damper positions alone provides assurance for meeting an ambient air limit. Instead, the provision as proposed only imposes more data reporting requirements on the industry for no additional emissions reduction or monitoring benefit.

- Operators would be required to install, calibrate, and maintain a monitoring device that continuously records on a rolling 15-minute average basis either the volumetric flow rate through each separately ducted hood or the static pressure at each separately ducted hood.[147] Here again, the proposal entirely ignores the Agency's own rationale in EPA's 1999 rulemaking that amended the EAF NSPS standards to allow mills the option of monitoring flow rates in each separately ducted hood or monitoring fan amperes and damper positions:

  > Both subparts give the owners and operators the option of either monitoring flow rates in each separately ducted hood, or monitoring fan amperage in conjunction with damper positions. Fan amperage is used as an indicator of total flow rate. A concern was raised that fan amperage was not necessarily directly correlated to exhaust flow rates, and could be affected by other factors such as ambient temperature. Therefore, it was recommended that owners and operators be given the option to monitor total flow rate directly, rather than using fan amperage as an indicator.[148]

  Feedback from industry representatives indicates that monitoring flow rates is not typical and that flow rate monitors would be expensive to install, calibrate, certify, and maintain. Further, flow rate monitoring is unnecessary because the baghouse is monitored in other ways (the baghouse is where all the shop air is discharged including flow coming from the meltshop fume collection hoods). Hence, there is no value from this requirement in improving air quality, and it only serves to provide another redundant compliance requirement.

  As noted above, we urge EPA to keep the current requirement of monitoring fan amps in place, because this parameter directly correlates to the air flow to the control device, via the fan curve, unique to each site.

  In the event the Agency finalizes a requirement for direct flow measurement, we request EPA to:

[146] Proposed 40 C.F.R. § 60.274(b)(1)(ii), § 60.274a(b)(1)(ii), § 60.274b(b)(1)(ii).

[147] Proposed 40 C.F.R. § 60.274(b)(1)(iii), § 60.274a(b)(1)(iii), § 60.274b(b)(1)(iii).

[148] 64 Fed. Reg. at 10,106-107 (emphasis added).

> (i) Allow placement of such flow meters either in the clean side of the baghouse (for those baghouses that have stacks) or in the inlet side of the baghouse (for baghouses without stacks); and
>
> (ii) Provide for an 8-hour (or once-per-shift) averaging of the flow in order to compare against set points to determine deviations. Flow rates to the baghouse can vary considerably based on heat-to-heat variations as well as during each heat based on the dynamic nature of EAF operations, including all phases of the heat cycle. Thus, EPA's proposal to assess flow on a 15-minute basis will not capture the full extent of variability of the flows to the baghouse.

In addition, EPA proposes to add entirely new obligations for the installation, monitoring, and maintenance of equipment during the "Charging and Tapping" furnace modes.[149] The Agency proposes that, for the "Charging and Tapping" furnace modes, operators must install, calibrate, and maintain a monitoring device that continuously records the capture system damper position(s), and install, calibrate, and maintain a monitoring device that continuously records either the volumetric flow rate through each separately ducted hood or the rolling 15-minute average static pressure at each separately ducted hood. As noted above, these requirements are unnecessary and ignore the 1999 rulemaking that provided alternative mechanisms for satisfying the operational monitoring requirements of the NSPS. EPA provides no explanation as to why such monitoring is needed or to support the Agency's change in position from prior EAF steel NSPS rulemakings, and further neglects to account for any costs associated with these fundamental changes to the operational monitoring requirements.

Despite reversing over four decades of a regulatory approach that provides EAF steel mills with alternative options for monitoring furnace operations, and ignoring its own prior rulemaking analyses and justifications without explaining why those long extant Agency positions are no longer valid or have changed, EPA provides no explanation, justification, or discussion of these proposed "clarification" changes in the rulemaking record. Nor has the agency evaluated or provided any analysis of the technical requirements and costs of implementing these changes, which will, at minimum, require installation and maintenance of additional monitoring equipment, along with associated staffing and labor costs.

To characterize as "minor", "editorial," and "clarifying" such a reversal of the regulatory alternatives under which the industry has operated for many years, and which were justified with explicit discussions in the 1975, 1984 and 1999 rulemaking records, is blatantly misrepresentative and the very definition of arbitrary and capricious. Ultimately, EPA's proposal simply would remove the most common "operational monitoring" compliance mechanisms for EAF steel mills (monitoring fan amps and damper positions; conducting VE observations) and replace them, gratuitously and without explanation, with a series of redundant data requirements that serve the same purpose.

[149] Proposed 40 C.F.R. § 60.274(b)(2), § 60.274a(b)(2), § 60.274b(b)(2).

C. EPA PROPOSES TO REVERSE PRIOR AGENCY DETERMINATIONS AND IMPOSE BLDS ON ALL BAGHOUSES WITHOUT EXPLANATION OR JUSTIFICATION

EPA proposes to add to Subparts AA and AAa a requirement to install and utilize BLDS on all baghouses, rather than only for single stack fabric filters, as currently required.[150]

When adopted in 1975, Subpart AA originally required baghouse opacity to be monitored using a COMS. The Subpart AAa Amendments eliminated the requirement to use a COMS for emissions from modular, multiple-stack, negative-pressure or positive-pressure fabric filters if the facility conducts daily Method 9 observations. At the time, EPA determined that "the use of visible emission standards is technically sound and provides the most practical and inexpensive means to ensure that affected facilities are properly maintained and operated."[151] Moreover, EPA acknowledged that, for modular, multi-stack baghouses, the capital and operating costs to install multiple COMS was unreasonable.[152]

For single stack baghouses, however, the requirement to use COMS continued until 2005. Amendments to the EAF steel NSPS in 2005 allowed mills to use a BLDS on single stack baghouses as an alternative to use of COMS.[153] Facilities using BLDS were required to have site-specific monitoring plans, adopt corrective action plans, and conduct daily Method 9 observations when the EAF was in operation.

Under the current proposal, for all NSPS Subparts, EPA would require all facilities to install and operate BLDS. In doing so, EPA ignores the reasons why the BLDS requirement, as an alternative to COMS, was limited to single-stack fabric filter baghouses, including modular, multi-stack baghouses for which BLDS have never previously been required. In short, BLDS are feasible for a baghouse that has one stack, and, accordingly, requires only one BLDS. However, certain baghouses are constructed with the equivalent of multiple "stacks." For example, some EAF steel facility baghouses do not have a "stack" at all but, rather, have exhaust monitors from each compartment in the roof of the baghouse. It is not uncommon for baghouses to have dozens of compartments; therefore, under the proposal, facilities may need dozens of BLDS to monitor each individual compartment.[154] This would substantially increase installation costs, as well as the cost and effort for monitoring.

In 2005, BLDS (in conjunction with VE observations) were deemed appropriate by EPA for single-stack baghouses as an alternative to COMS.[155] EPA did not propose or seek to impose BLDS on modular,

---

[150] Compare proposed and current 40 C.F.R. § 60.273(c) and (e), and 40 C.F.R. § 60.273a(c) and (e).

[151] 49 Fed. Reg. 43,838, 43,840 (Oct. 31, 1984).

[152] *Id*.

[153] 70 Fed. Reg. 8,523 (Feb. 22, 2005).

[154] In fact, because BLDS are notorious for false alarms, some facilities elect to install two BLDS to assist in determining false alarms. For such facilities, the number of BLDS required under the rule would double, with additional cost consequences.

[155] 70 Fed. Reg. at 8,524 (noting that "A COMS is not required on any modular or multiple-stack fabric filter if opacity readings are taken at least once per day during a melting and refining period, in accordance with EPA Method 9.")

multi-stack baghouses in 2005 as such facilities already were exempt from the COMS requirement under the 1984 rulemaking due to the impracticality and unreasonableness of requiring a COMS for each of potentially many "stacks."

Accordingly, it is unreasonable, and contrary to the Agency's prior determinations, to require multiple BLDS, in addition to visible emissions monitoring, as an alternative to COMS for all baghouses instead of only for single-stack fabric filter baghouses as EPA established in 2005. This proposed change is particularly unreasonable because EPA provides no explanation for it and ascribes no cost to it.

V. THE PROPOSED BUILDING INSPECTION REQUIREMENT IS VAGUE AND UNNECESSARY

EPA has added to Subparts AA and AAa, and proposed for Subpart AAb, a new building inspection requirement to "ensure that the building does not have any holes or other openings for particulate matter laden air to escape."[156] The proposed provision goes on to state that "any deficiencies that are determined by the operator to materially impact the efficacy of the capture system shall be noted and proper maintenance performed."

We agree that keeping the meltshop building in good condition is important. However, as noted in Section II.A.4 of these comments, a requirement to ensure the "building" does not have any holes or other openings for dust to escape imposes a *de facto* "total building enclosure" requirement on the shop. As proposed, the standard is incredibly broad and potentially would prohibit *any* hole or opening that allows *any* dust to escape from *any* part of the building housing the meltshop (such buildings can be over a quarter-mile long and house many operations besides the EAF and AOD). This requirement appears to contradict the current six percent shop opacity limit for existing facilities. Such an open-ended and subjective prohibition serves primarily to empower inspectors to allege violations and force companies to demonstrate that a perceived and ephemeral small emission of dust (less than six percent opacity) from a hole somewhere in the building does not "materially" compromise the efficacy of the dust capture system or is not associated with EAF or AOD emissions. It is easy to envision how this subjective provision can be abused in an enforcement scenario and, at minimum, create excessive "busy work" for the facility and open up companies to regular second-guessing by EPA or state inspectors, who may not be familiar enough with EAF steel mill operations to understand what is and is not "material" under the standard.

The standard as drafted also is unrealistic as EAF meltshops must have numerous openings both for purposes of dust-free ventilation and to enable movement in and out of the building of various, often large, pieces of equipment and materials (as discussed in Section II.A.4).

Moreover, the building inspection requirement is redundant given that EAF mills must comply with the applicable shop opacity limits from any such opening. Such a surrogate for total building enclosure is unnecessary to ensure compliance with the shop opacity limit, for which facilities must already assess

[156] Proposed 40 C.F.R. § 60.274(e), § 60.274a(d), and § 60.274b(d).

compliance every day the furnace is operating. And, as discussed previously, this total enclosure surrogate will exacerbate concerns with heat stress on workers and equipment.

EAF steel meltshops are enormous buildings (*i.e.,* tens of thousands of square feet and potentially a quarter of a mile long or more). It is inevitable as a practical matter that repairs may be needed occasionally to patch holes or seams in the structure. However, we caution EPA against concluding that the mere presence of any hole, of any size, in the meltshop roof or wall is automatically a material or significant problem. Although not a control device itself, the meltshop building does help contain emissions for capture by the canopy hood systems. We note that the meltshop is not under positive pressure. In fact, in the roof area near the EAF, the local pressure is generally negative, given the draw of the canopy. Similarly, the DEC system creates negative pressure that keeps melting and refining emissions from drifting away from the EAF. As a result, the presence of a hole or tear does not mean that it can become a source of emissions to the ambient air.

We considered numerous potential approaches to limiting the "inspect and repair" requirement to holes in the building that are truly "material" – based on size, location, distance from the furnace, association with EAF/AOD dust escaping – but it is difficult to define that term in a way that is meaningful across the industry. Having considered the issue, we believe the provision is unnecessary given the discussion above, particularly the fact that EAF facilities must meet the shop opacity requirements regardless of any building inspection and repair provision.

If EPA nevertheless decides to include a building inspection provision, the Agency, at minimum, must define what qualifies as a "material"/"significant" hole or opening in the meltshop for compliance purposes. Any such definition must include evidence that the opening was associated with fugitive dust emissions from the EAF/AOD in excess of permitted shop opacity limits.

VI. EPA'S COST ASSUMPTIONS ARE MISGUIDED AND INCOMPLETE

EPA's proposal does not, by any stretch of the imagination, reasonably account for the costs associated with the emissions limits that the Agency suggests are "achievable through the application of the best system of emissions reduction." In fact, EPA's own data and analyses demonstrate that the proposed new subpart AAb requirements will, at best, result in marginal reductions in PM emissions that, if achievable at all, will be incredibly cost ineffective.

The costs EPA ascribes to this proposal are conspicuously underestimated. EPA's costs of compliance with the proposed new Subpart AAb are plainly incomplete, belied by data in EPA's own docket, and purely speculative. Moreover, notwithstanding the Agency's extensive proposed changes to the stringency of, and monitoring requirements for, Subparts AA and AAa, EPA inexplicably presumes that companies can implement these new requirements at no additional cost.

A. Cost Analysis for Proposed Subpart AAb[157]

EPA's determination that zero percent opacity "reflects the degree of emission limitation achievable through the application of,"[158] BSER is based on:

> findings that the proposed melt shop opacity of 0 percent was being achieved by 19 of the 31 facilities for which the EPA has opacity data (from 2010), and that for the remaining 12 facilities, average opacity in the test data was no higher than 1.2 percent (with a range of 0.1 percent to 1.2 percent).[159]

Accordingly, EPA's determination that "0 percent is feasible and well documented" is based on prior ICR responses showing that some facilities achieved zero percent opacity during performance tests and other facilities reported opacity levels quite close to zero percent during stack testing.[160] Setting aside questions about the unrepresentativeness of this data (as discussed in Section II.A), we note that EPA did not examine, as the preamble suggests, "advances in control technologies, process operations, design or efficiency improvements, or other systems of emission reduction, that are 'adequately demonstrated.'"[161] Rather, EPA looked to a decades-old BID, concluded that "[c]anopy hoods are a common method of controlling fugitive EAF emissions,"[162] and assessed costs for:

> adding a partial roof canopy (segmented canopy hood, closed roof over furnace, open roof monitor elsewhere) to collect PM emissions that might otherwise escape through the melt shop roof vents *to achieve complete control of melt shop fugitives*.[163]

EPA did not analyze whether canopy hoods were used by the 19 facilities that recorded zero percent opacity during performance testing or absent from the nine facilities that recorded the highest opacity

---

[157] This discussion is primarily focused on EPA's proposed zero percent shop opacity standard because, as discussed in Section III, EPA's analysis of the proposed total-facility production-based standard cannot be relied upon to calculate baseline PM emissions on a lb/ton basis or the potential for the proposed new standard to reduce those emissions. From a control perspective, EPA mistakenly assumed it lacked information on the "air/cloth" ratio for the facilities in its database – that information is clearly within its docket and was actually summarized by EPA. In sum, EPA's analysis of its proposed total-facility production-based standard is so facially erroneous and deficient it does not allow a reasonable basis for comments on the specific costs EPA associates with that aspect of the proposal. EPA cannot reasonably estimate how its proposed standard compares to the current standard, whether and to what extent it increases stringency, what additional controls might be needed to meet that standard, what the costs of those controls may be, or what benefits may come from that standard.

[158] CAA § 111(a)(1).

[159] 87 Fed. Reg. at 29,716.

[160] *Id.*

[161] *Id.* at 29,714.

[162] *Id.* at 29,717.

[163] *Id.* at 29,716 (emphasis added). EPA uses the term "partial roof canopy" and "partition roof canopy" interchangeable throughout the preamble for the proposal and in other supporting memoranda, but defines those terms as the same (*e.g.*, both refer to a segmented canopy hood, closed roof over furnace, and open roof monitor elsewhere).

during performance tests. This information was available to EPA in the docket for the Subpart YYYYY NESHAP for EAFs – the same docket that supplied the majority of the performance test data EPA used in this rule.[164] EPA's own review of the survey responses in the Subpart YYYYY docket in June 2005 shows that EPA knows that canopy hoods were used to capture fugitive emissions from 32 of the 38 EAFs described in the ICR survey responses, and that the presence or absence of a partial roof canopy did not determine whether the facilities responding to the ICR could achieve zero percent opacity.[165] Therefore EPA has no basis to now conclude for purposes of demonstrating achievability and cost effectiveness that the singular act of installing a partial roof canopy will "achieve complete control of melt shop fugitives."[166]

EPA's arbitrary and unsupported conclusion is also contradicted within the Agency's cost analysis. In order to estimate how much PM is emitted from a facility that emits six percent opacity, EPA used the *1982 BID*'s estimate that EAFs emit an average of 29 lb/ton of uncontrolled PM emissions.[167] EPA then relied on the *1982 BID* again to estimate that facilities emitting six percent opacity captured 90 percent of those emissions using a "segmented canopy hood, closed roof over furnace, open roof monitor elsewhere."[168]

This is the exact fugitive emission capture technology that EPA's *Cost Analysis* presumes facilities with greater than zero percent opacity can install to achieve zero percent opacity. In other words, EPA's *Cost Analysis* assumes that facilities with a "segmented canopy hood, closed roof over furnace, open roof monitor elsewhere" are emitting six percent opacity and if those facilities install a "segmented canopy hood, closed roof over furnace, open roof monitor elsewhere" they will achieve zero percent opacity. This is incoherent.

1. EPA's Control Cost Assumptions are Baseless

As explained above, EPA has no basis to assume that a partial roof canopy could allow all new, modified, and reconstructed facilities to achieve zero percent shop opacity at all times. According to an informal survey of the Steel Associations' members and consistent with EPA's findings in the Subpart YYYYY docket, most facilities already use canopies and partitions to direct EAF emissions within the shop to the extent feasible.

However, melt shop partitions of the size necessary to meaningfully contain EAF emissions within the meltshop are not feasible in many mills given other equipment and shop design, including cranes. In particular, sizable partition walls are not feasible at many EAF steel mills because they will interfere with

[164] EPA-HQ-OAR-2004-0083.

[165] *See* Summary of EAF Survey Responses (June 2005), EPA-HQ-OAR-2004-0083-0068.

[166] 87 Fed. Reg. at 29,716 (emphasis added).

[167] *Cost Analysis* at 7, referencing BID at 3-37, table 3-7.

[168] *Cost Analysis* at 7, referencing BID at 4-23, table 4-1.

overhead cranes that transport scrap metal to the furnace. Similarly, transfer ladles that are carried by crane to and from the furnace for tapping molten metal would be blocked by partition walls.

For existing facilities that may trigger an NSPS modification in the future, achieving zero percent shop opacity would require extensive re-engineering that would be costly and introduce practical and worker safety concerns as well. For example, one Association member stated that zero percent shop opacity could only be achieved, if at all, with near total enclosure of the EAF and doubling the flow rate of the emission control system.

Multiple other representatives of the Steel Associations explained that only very short (and therefore marginally effective) partition walls could be installed above the crane because of the lack of space between the crane and the roof. They also noted that such short partitions deteriorated quickly due to the heat and other elements. Thus, to increase the size and collection efficiency to meet a zero opacity requirement, the facility would have to raise the roof of the structure at an undetermined cost (a cost that likely would trigger a "major modification"), and potentially enclose the entire monovent, which would likely create worker safety and heat stress issues.

In addition, facilities would have to increase the number and volume of fans to the baghouse, as well as require new or additional fans in the shop and additional baghouses because the facility's current baghouses are operating at close to maximum capacity. Moreover, for servicing, cranes have to be moved to a different part of the meltshop due to the partitions being so close to the top of the cranes. To achieve compliance, existing facilities such as these also would have to enclose the large openings in the casting area to prevent winds from blowing through the shop or wall off the EAF operations. Neither option is feasible - meltshops are typically long buildings with EAF, LMS, and casting in the same structure.

Indeed, while EPA concedes that it looked to information in the Ferroalloys NESHAP – and not to steel EAF/AOD facilities potentially subject to this proposed revision – in reaching its conclusion that partial roof canopies are a one-size-fits-all solution "to achieve complete control of melt shop fugitives,"[169] the docket for the Ferroalloys NESHAP should have also apprised EPA of the irrationally of its control cost conclusions. In its economic analysis of the Ferroalloys NESHAP, EPA conceded that

> discussion with vendors and ventilation experts and our research led to a conclusion that implementation of fugitive capture and control systems is complex and that *system parameters are highly dependent on specific localized parameters* (e.g., building volume, process locations, and airflow.) Any plans to implement a system for ventilation to control fugitive emissions should begin with a rigorous, systematic examination of the ventilation requirements throughout the building leading to design and implementation of an enhanced fugitive capture and control system…[170]

[169] 87 Fed. Reg. at 29,716 (emphasis added).

[170] Harris Memo: Cost Impacts of Control Options Considered for the Ferroalloys Production NESHAP to Address Fugitive HAP Emissions, at 2 (emphasis added).

In fact, the Ferroalloys analysis is predicated on "[EPA's] expectations of the controls likely to be installed *as a result of facility-specific ventilation analyses*, the controls likely to be needed to address risk, and *existing capture and control systems at the facilities.*"[171] Thus, EPA's Ferroalloys analysis is rooted in an understanding of context-specific control mechanisms that are unique to the facilities in which they must be installed. Said differently, EPA did not intend for this cost-analysis of BSER proposed in the ferroalloy industry to be universally applicable to all ferroalloy facilities, let alone those outside of the ferroalloy industry.

Second, the Ferroalloys analysis relies on a mere two facilities to conduct the bulk of its cost analyses, with the only supplemental information coming from the Agency itself.[172] To rely on such limited input, with no support for the representativeness of the two facilities selected, is problematic as it can hardly be presumed to be representative of the larger industry. Indeed, this again demonstrates why EPA rightly tempered this cost analysis by acknowledging the context-specific nature of the costs expended.

Further, having only two facilities present their cost analyses means the baseline understanding of costs adopts pre-existing measures these facilities employ. In other words, adopting only these two facilities cost analyses presupposes all the conditions present in these two facilities. For example, "both facilities employ negative-pressure hoods to collect emissions from tapping operations and direct them to a control device."[173] EPA immediately tempers this observation by again recognizing that "design of local ventilation systems begins with a detailed analysis of specific localized parameter . . . leading to development of a site-specific local ventilation plan and installation of custom hoods and ventilation equipment." EPA itself recognizes the difficulty of retrofitting a one-size-fits-all solution onto a diverse milieu of facilities.

Not only is the assumption of similar conditions problematic, but relying on only two facilities similarly means extensive gaps about specific sites exist in the data. EPA acknowledges this and remedies it by filling in those gaps with both "general considerations" and "facility-specific considerations."[174] While some of these considerations are reasonable, others are too tenuous and, therefore, of little use. For example, "downtime associated with installation was not directly included in [*sic*] cost estimates,"[175] meaning EPA had to estimate how long a facility would take to install the measures.

Finally, after purporting to scale ferroalloy controls and cost-estimates to EAF/AOD steelmakers, EPA readjusted the ferroalloy rule's costs from 2012 dollars to 2020 dollars. This supposed recalibration is

[171] *Id.* at 3 (emphasis added).

[172] *Id.* at 2.

[173] *Id.* at 9.

[174] *Id.* at 9-11.

[175] *Id.* at 10.

already outdated. The COVID-19 pandemic has disrupted supply chains in unforeseen fashion,[176] with the building and construction industries facing unique shortages, skyrocketing the prices of material.[177] This will only be exacerbated by the fact that many canopy hoods and other ventilation mitigation equipment must, by EPA's own admission, be custom-designed for facility specific use. Moreover, the COVID-19 pandemic resulted, and continues to exacerbate, a major disruption in America's labor force, with America's construction industry taking a disproportionately massive hit.[178] In October 2021, 402,000 construction positions were unfilled, the second-highest level recorded since data collection began in December 2000.[179] In fact, experts anticipate that the construction labor shortage is set to intensify over the next six months, stalling countless construction projects across the country.[180] Consequently, scaling the ferroalloy estimates from 2012 USD to 2020 USD is inadequate, as it wholly neglects the unprecedented shift to higher material costs from supply chain disruptions, as well as higher installation costs from a colossal labor shortage and a likely long-term upward readjustment of labor rates.

In comparing costs against capital expenditures and revenue, EPA introduces another interesting way labor costs might rise. In its Economic Impact Analysis, EPA concedes that "demand for labor employed in steel production activities and associated industries… might experience adjustments as there may be increases in compliance-related labor requirements such as labor associated with the manufacture, installation, and operation of pollution control as well as changes in employment due to quantity effects in directly regulated sectors and sectors that consume EAF-steel. For this proposal, however, [the Agency] does not have the data and analyses available to quantify these potential labor impacts."[181]

Another issue worthy of mention in cost adjustment is inflation. Though the adjustment of 2012 USD to 2020 USD in the cost-analyses considered inflation adjustments, inflation rates from 2020 through 2022 are more than those of 2012 through 2020 *combined*. Indeed, inflation rates in total from 2012 through

---

[176] Knut Alicke, Ed Barriball, and Vera Trautwein, *How COVID-19 is Reshaping Supply Chains*, McKinsey & Co., November 23, 2021 (accessed via https://www.mckinsey.com/business-functions/operations/our-insights/how-covid-19-is-reshaping-supply-chains).

[177] Siobhan Rodriguez, *Buidling and Construction Industry Face Supply Chain Disruptions, but There Is Hope*, Georgia School of Technology, November 8, 2021 (accessed via https://news.gatech.edu/news/2021/11/08/building-and-construction-industry-face-supply-chain-disruptions-there-hope).

[178] Garo Hovnanian, Ryan Luby, and Shannon Peloquin , *Bridging the labor mismatch in US construction*, McKinsey & Co., March 28, 2022 (accessed via https://www.mckinsey.com/business-functions/operations/our-insights/bridging-the-labor-mismatch-in-us-construction)

[179] Garo Hovnanian, Ryan Luby, and Shannon Peloquin , *Bridging the labor mismatch in US construction*, McKinsey & Co., March 28, 2022 (accessed via https://www.mckinsey.com/business-functions/operations/our-insights/bridging-the-labor-mismatch-in-us-construction)

[180] Patrick Sisson, *The Construction Labor Shortage is Set to Intensify Over Next 6 Months*, Bisnow, June 28, 2022 (accessed via https://www.bisnow.com/national/news/top-talent/short-materials-now-short-workers-constructions-cost-set-to-rise-amid-new-labor-woes-113573).

[181] Economic Impact Analysis at 3-8.

2020 are 13.1%, while inflation rates from 2020 through 2022 alone are 17.5%.[182] Alarmingly, many experts anticipate inflation getting worse, noting "a real possibility that inflation rates will not come down to [policymaker's preferred targets] for many years."[183] This unprecedented spike in inflation, combined with the aforementioned worsening status parts and labor costs, grossly undermine the Agency's adjustment of the ferroalloy cost analyses from 2012 to steel-making cost analyses of 2020 using trend-based extrapolation.

Though EPA did anticipate "unforeseen changes in industry and economic shocks"[184] in its Economic Impact Analysis, as seen above, the paradigm shifts left in the wake of COVID-19 were unprecedented, and continue into uncharted territory. In other words, past trends have and will be broken and, accordingly, are of limited utility for future extrapolation.

2. EPA's Estimates of the PM Associated with Shop Opacity are Unsupported and Improper

EPA's quantification of PM emissions attributable to shop opacity and all resulting cost-effectiveness calculations rest on many assumptions for which EPA provides no support. For one, EPA suggests that facilities with higher PM emissions from the baghouse have lower shop opacity:[185]

> facilities that control their melt shop opacity to 0 percent are collecting more PM (specifically from the melt shop) than facilities that have a nonzero melt shop opacity and, as a result, are sending more PM to their control devices. Consequently, EAF facilities with 0 percent melt shop opacity are expected to have a slightly higher control device PM emission rate on average compared to EAF facilities with greater than 0 percent melt shop opacity, as evidenced by the EAF dataset of 33 EAF facilities. As a corollary, at EAF facilities with 6 percent melt shop opacity, some of the PM generated by the EAF is not captured, avoids the control device, and can exit through the melt shop roof, thus raising the melt shop opacity to above zero. In turn, facilities with 6 percent melt shop opacity collect less PM and, therefore, less PM is sent to control device, which results in (slightly) lower PM emissions in the control device exhaust.[186]

EPA believes that the inverse relationship it presumes to exist between stack emissions (and therefore presumed capture efficiency) and shop opacity is borne out by the ICR performance test data for the zero

[182] Annual rates of inflation are calculated at https://www.usinflationcalculator.com/inflation/current-inflation-rates by using 12-month selections of the Consumer Price Index, which is published monthly by the Labor Department's Bureau of Labor Statistics.

[183] Jonathan Ponciano, *Inflation May Get Much Worse This Summer-And Could Linger 'Many Years'-Experts Warn*, Forbes, July 4, 2022 (accessed via https://www.forbes.com/sites/jonathanponciano/2022/07/04/inflation-may-get-much-worse-this-summer-and-could-linger-many-years-experts-warn/?sh=74541f2e4d26).

[184] Economic Impact Analysis at 2-14.

[185] 87 Fed. Reg. at 29,715 – 29,716.

[186] *Id.*

opacity and non-zero opacity facilities, but the opposite is true. A simple inspection of the data shows that zero percent opacity is not correlated with higher stack emissions.

The figure below plots (in blue) the PM stack emissions values for the 13 zero percent opacity facilities in EPA's database and plots (in red) the PM stack emissions values for those nine facilities that recorded opacity values above three percent. As is clear, the highest stack emission values are the same for both zero percent opacity and three percent opacity facilities, and the values for the three percent opacity facilities are completely subsumed within the values for the zero percent opacity facilities, with just the two lowest values in the three percent opacity dataset outside of the range of the zero percent opacity dataset. In view of this, EPA's presumption that there are statistically significant differences in the medians of the two data sets is not supportable. It is more likely that the calculated differences reflect variability wholly unrelated to the correlation theory espoused by EPA.

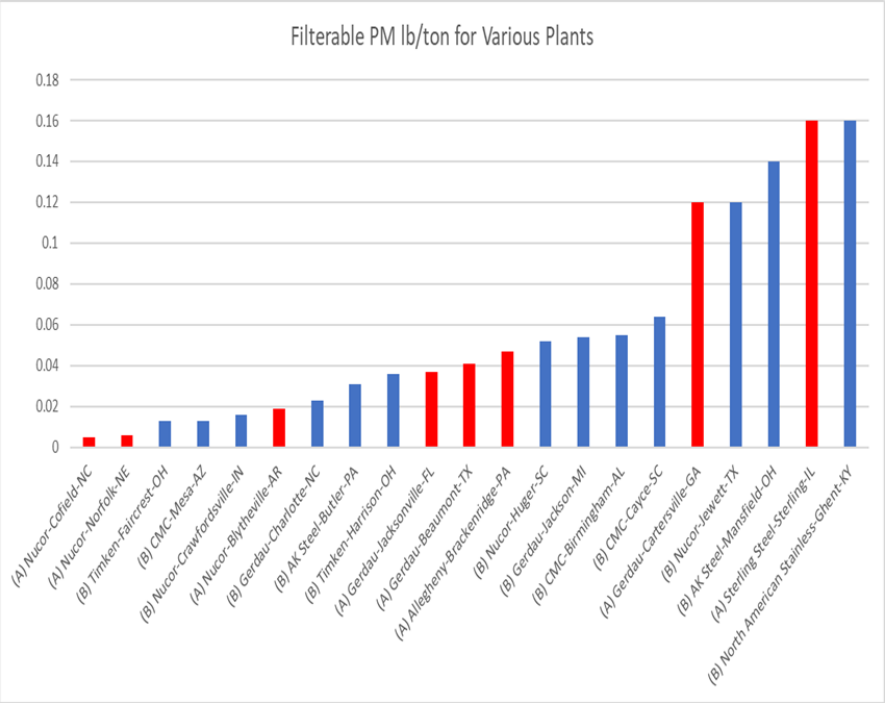

Notwithstanding that EPA's stack emission/opacity correlation presumption is contradicted by the Agency's own data, EPA uses this surmised correlation as the basis for ascribing an implausible PM emission reduction value to its proposed zero percent opacity standard. We illustrate EPA's analytical flaws via a simple example, shown in the figure below.

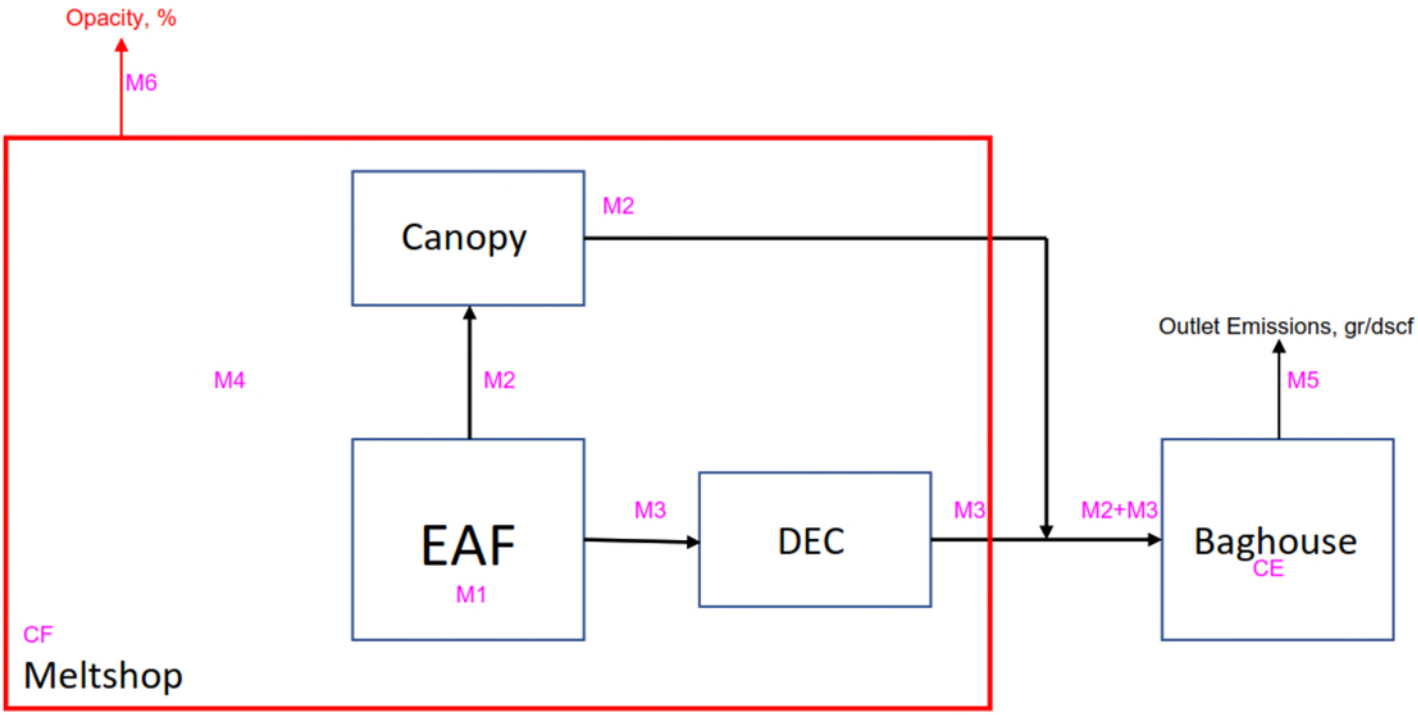

The schematic above shows the simplest configuration of a meltshop with a single EAF, with its canopy and DEC evacuation systems, and a single baghouse. As the record shows, many shops have more complex arrangements, with multiple EAFs and multiple baghouses. The assumptions discussed below become even more complicated (and less supportable) in these more complex configurations.

The schematic above also shows the two emissions points of filterable PM to the ambient air:

(i) The outlet emissions at the baghouse, measured directly as a <u>concentration</u> in periodic stack tests, as grains of PM/dry standard cubic feet (or gr/dscf), which is convertible to mass units of pounds per ton of steel produced, relying on process data collected during the test; and

(ii)The fugitive emissions from the meltshop shown in red. It is important to note that since the mass of fugitive emissions cannot be directly measured given the scale of a meltshop, only opacity measurements are feasible. Two important caveats are in order. First, meltshops contain numerous other equipment and activities (*i.e.*, other than the EAF) which also can generate fugitive emissions that can be read as opacity. Second, it is not possible to credibly correlate the measured opacity with the mass of filterable PM. While it is correct that opacity is due to the presence of particles, quantifying the mass of particles that correspond to a given level of opacity is impossible because the observed opacity is a function of many variables include particle size and distribution, particle composition, ambient conditions, capabilities of the human (or non-human) observer, and others. Thus, even theoretically there is no reason to presume a one-to-one correspondence between opacity and mass of PM – at any particular meltshop, not to mention across all meltshops as a

whole. Yet, much of EPA's "analysis" supporting its proposed rule attempts to quantify the benefits (*i.e.*, mass of PM reduced) as opacity is reduced from one level to a lower level – for example from 6% to 0%. This "analysis" is nothing more than mere algebra resting on a set of unsupported assumptions.

(iii) EPA begins with the measured emissions at the baghouse exit during stack tests, say X lb/ton, shown as M5 in the schematic above. We set aside, for this simplified discussion, the many issues of variability that can effect this starting value of measurement of filterable PM. Next, EPA assumes that the baghouse has an assumed (constant) control efficiency, say Y%, in order to estimate the inlet lb/ton to the baghouse – *i.e.*, the M2+M3 value shown in the schematic – *i.e.*, (M2+M3) = M5/(1-Y/100). Here, we must note that not only do baghouses demonstrate inherently variable efficiencies even from run to run during the same test, even small differences in the assumed value of Y (which is typically much greater than 99%) can result in large variations in the estimate of M2+M3. Thus, assuming Y=99.5% versus 99.9% can result in a 5-fold increase in the estimated M2+M3 value, for example. M2 and M3 are the portions of the mass of emissions from the EAF (M1) which report to the canopy and the DEC, respectively. That leaves M4, the mass of emissions generated at the EAF but not captured by the evacuation system. Thus, M1 = M2+M3+M4. Or, M4 = M1 – (M2+M3). Since M2+M3 has been estimated as noted above, calculating M4 requires an estimate of M1, or the uncontrolled rate of PM emissions from a meltshop for a heat cycle. There are no reliable data for M1 because it is not directly measurable and it is highly variable from heat to heat given the many factors that can affect the totality of filterable PM emissions across all four modes of the heat. But, if instead one assumes that the entire meltshop has a certain capture efficiency for the totality of M1 emissions, say C%, *i.e.*, (M2+M3)/M1 = C/100, then M1 can be estimated from this equation as long as C is assumed. In fact, that is what EPA does. Like Y above, the estimate of M1 via this means is very sensitive to the assumed value of C.

In any case, using the approach above, EPA finally arrives at an estimate of M4, the mass of fugitive emissions from the meltshop relying on: the measured baghouse exhaust PM level, the assumed baghouse efficiency, and the assumed meltshop capture efficiency. We note that while the value of Y may have some basis (*i.e.*, may be available from some tests where both inlet and outlet PM were measured), there is no basis to presume the value of C. Even complex computational fluid dynamic ("CFD") models cannot properly estimate C.

But even with all of this, we are left with an estimate of M4, the mass of PM emitted from the EAF as fugitive PM from the meltshop. Even this mass emission, however, cannot be correlated to any level of opacity, for the reasons stated prior.

In total, EPA's analysis of the emissions reductions that will supposedly result from reducing meltshop opacity from one level down to a lower level, or the cost-effectiveness that may accompany such reductions, are nothing more than speculation dressed up as algebra, held aloft by unsupported assumptions.

3. EPA's Data Demonstrate that the Proposed Zero Percent Opacity Standard is Not Cost-Effective

Even assuming *arguendo*, that EPA has: (1) reasonably estimated the amount of PM associated with six percent opacity; (2) rationally concluded "facilities can achieve complete control of melt shop fugitives"[187] by simply adding a partial roof canopy; (3) appropriately considered that modified or reconstructed facilities have not already installed a partial roof canopy and/or are not configured in a way that precludes them from doing so; and, (4) reasonably calculated the full costs of installing, operating, and maintaining a partial roof canopy, the Agency's own data still demonstrate that the zero percent opacity standard is incredibly cost-ineffective.

This is because EPA uses all of these (highly speculative or demonstrably incorrect) assumptions to weigh the costs and benefits of PM reductions associated with a change from six percent shop opacity to zero percent shop opacity.[188] But *EPA's data show* that meltshops at facilities are not emitting six percent opacity; they are emitting an average of 0.14 percent opacity.[189] This 0.14 percent average opacity is broadly consistent with the Associations' members experience and at the heart of our concerns with the proposed zero percent shop opacity standard and its lack of necessity. Most facilities meet zero percent opacity most of the time, but we have serious concerns about the technological feasibility (and cost) of a standard that requires all new, modified, and reconstructed facilities to achieve zero percent opacity at all times. The difference between 0.14 percent opacity and zero percent opacity is therefore exceptionally expansive (and expensive to achieve) from the standpoint of compliance and cost, but negligible from the perspective of environmental benefit in the form of reduced PM emissions.

The table below was recreated from Table 1 in the preamble to EPA's proposal.[190] It shows estimated PM reductions from reducing opacity from six percent to zero percent at small, medium, and large facilities, as well as the total annualized costs for those facilities. EPA estimates the changes from six percent opacity to zero percent opacity will allow small facilities reduce PM emissions by 56 tons per year at a cost of $1,100 per ton, medium facilities reduce PM emissions by 730 tons per year at a cost of $1,100 per ton, and large facilities reduce PM emissions by 4,000 tons per year at a cost of $1,000 per ton.

The Associations added the highlighted portion this table, which show the PM reduction potential and cost of a zero percent opacity limit (to the extent achievable) from the actual baseline shop opacity level that EPA itself calculated (0.14 percent). By making this one change from the hypothetical six percent opacity baseline to the actual 0.14 percent opacity baseline that EPA calculated, small facilities reduce PM emissions by 1.2 tons per year at a cost of $50,000, medium facilities reduce PM emissions by 3.4

[187] *Id*. at 29,716 (emphasis added).

[188] *Id*. 29,717.

[189] *Emissions Memorandum* at 12.

[190] 87 Fed. Reg. at 29,717.

tons per year at a cost of $235,294 per ton, and large facilities reduce PM emissions by 7.8 tons per year at a cost of $512,821 per ton.

This is EPA's own data and it demonstrates beyond question that EPA's proposed zero percent opacity standard imposes incredibly high costs for incredibly small benefits. This proposed zero percent opacity standard is not the product of reasoned decision-making. It is an arbitrary and capricious abuse of agency discretion.

Cost parameter	Model plant size		
	Small	Medium	Large
Air flow, acmm [acfm]	1,300 [45,000]	18,000 [640,000]	91,000 [3,200,000]
Capital Costs	$480,000	$6,800,000	$34,000,000
Operating and Maintenance Costs	$27,000	$340,000	$1,700,000
Total Annualized Costs	$60,000	$800,000	$4,000,000
PM Removed 6% opacity to 0% opacity, tpy	56	730	4,000
Cost-effectiveness, $/ton	$1,100	$1,100	$1,000
PM Removed 0.14% Opacity to 0.00%	1.2	3.4	7.8
Cost-effectiveness, $/ton	$50,000	$235,294	$512,821

B. EPA Conducted No Cost Analysis for its Proposed Changes to Subparts AA and AAa

While EPA's cost analysis of proposed Subpart AAb is profoundly flawed, EPA conducted no cost analysis at all for its proposed changes to Subparts AA and AAa. Indeed, what EPA labels as "editorial and clarifying changes,"[191] are, in reality, substantive new requirements with real costs and burdens that are centrally relevant to a reasoned consideration of whether to impose regulatory burdens on facilities under Subparts AA and AAa.[192] Thus, even if EPA could impose substantive new NSPS requirements on facilities that are not new, modified, or reconstructed (which it cannot), EPA failed to engage in reasoned decision-making by wholly ignoring the costs of these proposed new requirements.

The following are some of the proposed new Subpart AA and AAa requirements that EPA impermissibly excluded from its cost and economic impact analyses:

- Conduct daily observations of "Shop Opacity" "during charging or tapping, or during the period established to have the greatest potential for uncaptured emissions to escape the melt shop;"[193]

[191] 87 Fed. Reg. at 29,721 and 29,726.

[192] *See Michigan v. EPA*, 135 S.Ct. 2699.

[193] Revised proposed 40 C.F.R. § 60.273(d), § 60.273a(d), § 60.273b(d).

- Monitor and record on a *continuous* basis the rolling 15-minute average furnace static pressure;[194]
- Install, calibrate, and maintain a monitoring device that *continuously* records damper position(s); and,[195]
- Install, calibrate, and maintain a monitoring device that continuously records on a rolling 15-minute average basis either the volumetric flow rate through each separately ducted hood or the static pressure at each separately ducted hood,[196]
- Install and utilize BLDS on all baghouses, rather than only for single stack fabric filters.[197]

VII. CONSISTENT WITH OTHER INDUSTRY SECTORS, EAF STEEL FACILITIES SHOULD BE ALLOWED 24 HOURS TO RESPOND TO BLDS ALARMS AND TO COMPLETE THE RESPONSE AS SOON AS PRACTICABLE

The current NSPS, and proposed Subpart AAb, provisions for responding to BLDS alarms require facilities to determine the cause of all alarms within one hour, and to alleviate the cause of the alarm within three hours by taking whatever response action is necessary.[198] In contrast, the same provision under the IIS NESHAP provides 24 hours to initiate a response, which is to be completed "as soon as practicable."[199] There is no justification for such a dramatic discrepancy in the two standards between similar industry sectors using the same type of equipment for the same purpose, particularly given that the IIS NESHAP was revised as recently as 2020.

The three-hour limit for alleviating the cause of an alarm is arbitrary and ignores the numerous scenarios that can and do occur when it may take a facility longer than three hours to identify and fix the cause of an alarm. Instead, the more rational approach in the IIS NESHAP – 24 hours to identify the cause and to alleviate the cause of the alarm "as soon as practicable" – is consistent with practice in reality. Quite simply, when dozens of baghouse compartments potentially must be inspected to determine the cause of an alarm, there is no assurance that identification of the cause and corrective action can be completed within a mere three hours.

In addition, the provision[200] that allows facilities to obtain advance approval from "the Administrator or other delegated authority" for additional time to take corrective action for certain specific conditions that

[194] Proposed 40 C.F.R. § 60.274(b)(1)(i), § 60.274a(b)(1)(i), § 60.274b(b)(1)(i).

[195] Proposed 40 C.F.R. § 60.274(b)(1)(ii), § 60.274a(b)(1)(ii), § 60.274b(b)(1)(ii).

[196] Proposed 40 C.F.R. § 60.274(b)(1)(iii), § 60.274a(b)(1)(iii), § 60.274b(b)(1)(iii).

[197] Proposed 40 C.F.R. § 60.273(c) and (e), and 40 C.F.R. § 60.273a(c) and (e).

[198] 40 C.F.R. § 60.273(f), § 60.273a(f), and § 60.273b(f).

[199] 40 C.F.R. § 63.7800(b)(4).

[200] 40 C.F.R. § 60.273(g), § 60.273a(g), and § 60.273b(g).

cause an alarm is impractical, given the wide variety of potential causes of an alarm, false or otherwise. Instead, EPA should provide for such scenarios in this rulemaking, particularly given that there is no reason for facilities to delay their response or corrective action.

Facilities have an obligation to comply with the NSPS emission limits, and thus have an incentive to alleviate malfunctions that trigger alarms. In other words, if a facility has a problem with its baghouse, it is going to fix it promptly or run the risk of being in noncompliance for an extended period of time. It is also important to point out that in many situations a baghouse can continue to be operated within its emission limits, including opacity limits, even if the cause of a particular alarm has not been identified or fully alleviated. For example, if a broken bag in a compartment causes an alarm, that particular compartment could be isolated and shut down without affecting the rest of the baghouse.

There are numerous circumstances when it takes longer than three hours to respond to and fully address the cause of a BLDS alarm. In order to avoid operation of the baghouse in a manner than can lead to excess emissions, many mills calibrate their BLDS to be highly sensitive. This heightened sensitivity necessarily increases the likelihood that a BLDS will trigger alarms when there has not been any actual bag leak. The factors that could contribute to a false BLDS alarm are numerous, and include heavy rain, changes in temperature or humidity, bag cleaning cycles, probe deterioration or caking on the probe, electrical malfunctions, interruption in system communication with probe, and mechanical issues unrelated to broken bags or leaks. These scenarios are described in further detail below:

1. *Weather* – BLDS alarms will occasionally trigger during a heavy downpour or when there are significant changes in temperature or humidity. Operators can confirm these alarms were not caused by broken bags or bag leaks by correlating the alarm to any significant weather conditions/changes at the time, through visual opacity observations, and through review of the BLDS readout to confirm a return to normal particulate loading following the triggering weather condition.

2. *Bag Cleaning Cycle* – As noted in EPA's BLDS guidance,[201] a BLDS may briefly alarm when the system comes out of a cleaning cycle. Most often, this is due to the temporary absence of dust in the bags, which acts as an additional filter medium. Operators can confirm these alarms were not caused by broken bags or bag leaks through visual opacity observations and through review of the BLDS readout to confirm a return to normal particulate loading as the bags re-accumulate dust.

3. *New Bag Start* – Similar to #2 above, BLDS alarms can be triggered immediately following a replacement of some or all of the bags in the baghouse. These alarms typically cease shortly after the restart as the new bags accumulate dust that acts as an additional filter medium. Operators can confirm these alarms were not caused by broken bags or bag leaks by correlating

[201] EPA, *Fabric Filter Bag Leak Detection Guidance* (EPA-454/R-98-015).

the alarm to the new bags, conducting visual opacity observations, and reviewing the BLDS readout to confirm a return to normal particulate loading as the new bags accumulate dust.

4. *Systems Checks/Testing* – Some facilities may run systems checks on their BLDS that cause the system to alarm. For example, a facility can check the sensitivity of a BLDS by introducing a handful of flour into a port upstream from the probe. In this example, the BLDS alarm will trigger briefly, but the operator conducting the test will surely know that the alarm was not caused by a broken bag or bag leak. Facilities also evaluate and optimize their BLDS performance through drift checks, response tests, calibration exercises, and other quality assurance procedures. Some of these procedures require the alarm to be triggered in order to test performance, but in other instances the BLDS alarm may be inadvertently triggered during testing. Regardless whether the systems check/testing alarm is triggered purposely or inadvertently, the operator can readily correlate the alarm with the systems check, and can confirm through visual observation or otherwise that the alarm was not additionally caused by a broken, leaking, or dislodged bag.

5. *Electrical Malfunctions* – As BLDS detection is based on contact electrification, alarms can be triggered due to electrical surges impacting the sensors, processing electronics, or the connections between the sensor and processing electronics. These surges can either be environmental (lightning) or from variations/malfunctions in the BLDS system, its software, or its power source. Additionally, the abrasive environment in the baghouse duct can deteriorate the probe, probe housing, and housing insulation, which can cause an increase in malfunctions. The alarms associated with these malfunctions/deterioration may provide the operator notice of the need for repair/maintenance, but they are not reliable indicators of broken, dislodged, or leaking bags.

BLDS also can experience electrical malfunctions and software glitches no different than many other types of electrical equipment. BLDS alarms may be triggered during temporary power lapses or brief connectivity issues between the sensor and the processing electrics, or between the processing electronics and the system output/alarm. Like any piece of electrical equipment, BLDS can experience brief mechanical or software glitches/errors, including with respect to the sensor's signal amplification or with the configuration of the processing electronics. In many cases, momentary electrical malfunctions or glitches will cause the BLDS to alarm only briefly, and operators can confirm that these types of alarms were not caused by broken bags or bag leaks by conducting a visual emissions observation, correlating the alarm to a known surge or observable electrical malfunction, reviewing the system readout to confirm no increase in pollutant loading, or through use of other means.

6. *Repair/Maintenance* – Some baghouse repair and maintenance activities may be conducted while the baghouse is in operation. In some cases, proper inspection and repair requires the baghouse to be operating in order to observe and repair malfunctions/maintenance issues. Often these activities are coordinated with a baghouse operator observing the BLDS readout in real time in order to identify the cause of an earlier alarm or to proactively identify

maintenance or performance issues. In other circumstances, baghouse repair and maintenance activities must be conducted when the baghouse is operating simply because the repair/maintenance is urgently needed and it is infeasible to quickly shut down the baghouse. Regardless of the specific reason for conducting repair/maintenance activities while the baghouse is operating, it is often the case that these activities will cause BLDS alarms. As workers open and manipulate compartments and conveyances they can introduce particulates into the system or dislodge caked or accumulated dust. Some maintenance and repair activities can also directly interfere with the BLDS causing it to trigger. As these maintenance and repair activities are conducted in conjunction with the baghouse operator, the operator can readily correlate a BLDS alarm to a repair activity occurring at that time. Moreover, because maintenance personnel are directly observing baghouse compartments during alarms such as these, they are in a position to fully confirm that the alarms were not caused by broken, leaking, or dislodged bags.

BLDS alarms can also be caused by maintenance and repair activities conducted when the baghouse is not operating. These activities can introduce foreign material or dislodge accumulations of material from ducts, conveyances, access panels, joints, and other components of the system upstream from the probe. When the baghouse restarts after such repair and maintenance activities, the newly introduced or dislodged material can cause the BLDS alarm to briefly signal. Because the operator will know (from direct knowledge or review of the baghouse maintenance log) that these dust-generating activities were conducted in the baghouse while it was idled, the operator can correlate a short-lived alarm upon restart with those maintenance/repair activities. This correlation can be confirmed through visual opacity observations and review of the BLDS readout to confirm a rapid return to normal particulate loading.

Because the potential triggers for a BLDS alarm are so numerous and frequently unrelated to any actual bag leak, determining the cause of the alarm often requires operators to undertake a multi-step troubleshooting process that requires multiple rounds of physical inspections and diagnostic efforts to narrow down the cause of the BLDS alarm. This process of elimination often requires more than three hours to complete, and can be even more time-consuming when the BLDS alarm is triggered and then stops soon after. Identifying the cause of a brief BLDS alarm after it ceases can be difficult if not impossible to determine.

Responding to and addressing a BLDS alarm within three hours can also be difficult when there is an actual bag leak. Some baghouses in the EAF industry can have 25 or more compartments housing 5,000 or more individual bags, and some mills do not have BLDS with detection capability in each separate compartment, often because the baghouse design does not allow for such monitoring (*e.g.*, multiple compartments sharing common exit plenum). As such, in these instances, mills must continue running and sequentially isolate compartments in order to determine which compartment may have caused the BLDS alarm. Assuming the sequential isolation of compartments allows the mill to narrow the potential problem down to one or a few compartments (which is not always the case, particularly when the BLDS alarm is not continuous), the mill must typically then physically examine the compartment(s), which may

contain 150 or more individual bags. If a bag has a significant rupture or been dislodged, the cause of the alarm will likely be apparent. However, given the sensitivity of many mills' BLDS, alarms can be triggered by extremely small holes in bags. In these cases, even a searching physical observation can fail to timely find the leak.

As previously noted, some mills also have difficulty responding to "intermittent alarms" that are triggered and then cease during the investigation. If, upon investigation of the initial alarm, there is no evidence of a bag leak, mills will typically record the alarm as resolved. If a BLDS alarm is again temporarily triggered shortly after the initial investigation, the mill will conduct another investigation and if there is no evidence of a bag leak, once again record the alarm as resolved. This "intermittent alarm" sequence can sometime repeat multiple times. And while the mill may have been able to respond to each separate alarm in under three hours, we are aware of at least once instance where an enforcement authority took the position that a company was in violation of the three-hour response requirement because the total time the mill spent responding to each of the separate "intermittent alarms" was in excess of three hours. To be clear, we believe the enforcement authority in this example misinterpreted the three-hour response requirement and that the mill properly and timely recorded and resolved each of the separate "intermittent alarms." We offer this example, however, to show how the three-hour response requirement presents a compliance risk even when BLDS alarm responses are completed within the three-hour window.

Accordingly, we urge EPA to adopt a 24-hour timeframe to initiate corrective action, and to require that response actions be completed as soon as practicable in order to provide for the flexible application of this aspect of the rule to address very diverse operations and to recognize the practical realities in identifying and responding to BLDS alarms. As noted, this approach is the same as that used in the IIS NESHAP, and also is consistent with 40 C.F.R. Part 63, subparts X, DDD, EEE, MMM, RRR, and TTT.[202] Rather than imposing two different response deadlines/approaches within the same industry (and in some instances the same company), we believe it will be less confusing and more consistent to adopt the same standard.

As noted above, BLDS alarms can be triggered for a variety of reasons and there is no single response time that can account for all the different types of baghouses and BLDS alarm scenarios, or the types of efforts necessary to respond to those alarms. EPA will be privy to the number of alarms that occurred at a facility and the time it took to correct the problem, and would be free to challenge the reasonableness of any response action. The more restrictions EPA places on the use of broken bag detectors; the less incentive it gives facilities to use the option.

In addition, we request that EPA modify the proposed "response actions" specified in 40 C.F.R. § 60.273(f), § 60.273a(f), and § 60.273b(f), as follows (requested additional language is italicized below):

(6) Establishing to the extent acceptable by the delegated authority that the alarm was a false alarm and not caused by a bag leak or other malfunction that could reasonably result in excess

[202] It would also be consistent with EPA's CAM regulations, which require facilities to alleviate the cause of an excursion "as expeditiously as possible." 40 C.F.R. § 64.7(d).

particulate emissions, *in which case alarms due to the monitor malfunction are not subject to the 3-hour response action requirement so long as the malfunction is timely corrected*; and

(7) Shutting down the process producing the particulate emissions; *provided, however, that process unit shut down is not required if an operators reasonably believes repetitive alarms are the result of a monitoring malfunction so long as the monitor malfunction is timely repaired*.

VIII. OTHER ISSUES FOR COMMENT

A. Existing NSPS Facilities Need to Be Afforded Ample Time to Comply with the New Requirements

Facilities will need ample time to come into compliance if the final rule retains the new requirements regarding (as discussed above) (1) shop opacity limits during charging and tapping, (2) installation, operation, and maintenance of the full suite of parametric monitoring requirements, or (3) installation of BLDS for all baghouses. For example, that time period must be sufficient to allow the required equipment to be designed/engineered, procured, installed, tested and connected to data systems. Once new equipment is installed, data will need to be collected in the final rule averaging time to prepare for a compliance stack test to set minimums against which deviations are to be reported in semiannual reports. Several years will be needed to complete all of these tasks. We recommend providing existing facilities at least three years to come into compliance with any such new NSPS requirements, with a provision to request additional time as appropriate.

B. The Definition of Charging Period Should Be Modified

EPA proposes to define the "charging period" as "the time period when iron and steel scrap or other materials are added into the top of an electric arc furnace until the melting and refining period commences." This proposed definition is longer than the true charging period for most bucket-charged EAFs, which, as reflected in the definition of "charge," is the time during "the addition of iron and steel scrap or other materials into the shell of an electric arc furnace or the addition of molten steel or other materials into the top of an AOD vessel." The true "charging period" concludes when the furnace roof is closed, at which point no further scrap metal or other materials may be introduced.

C. EPA Must Provide Guidance on Compliance during Malfunction Events as Part of the NSPS Regulations

EPA contends[203] that it has an obligation to eliminate the SSM exemption for the EAF NSPS regulations pursuant to the D.C. Circuit Court ruling in *Sierra Club v. EPA*,[204] in which the court vacated the SSM exemption under the General Provisions of the Agency's 40 C.F.R. Part 63 NESHAP regulations. While

[203] 87 Fed. Reg. at 29,721.

[204] 551 F.3d 1019 (D.C. Cir. 2008).

the Steel Associations acknowledge that the D.C. Circuit adopted this holding with respect to the NESHAP provisions promulgated under Section 112 of the CAA, this decision in no way compels EPA to eliminate SSM provisions in new and revised standards promulgated under Section 111.

As explained in Section I of these comments, Section 111 and Section 112 of the CAA are quite different. Section 112 "primarily targets pollutants, other than those already covered by a NAAQS, that present 'a threat of adverse human health effects,' including substances known or anticipated to be 'carcinogenic, mutagenic, teratogenic, neurotoxic,' or otherwise 'acutely or chronically toxic.'"[205] Under Section 112, "EPA must directly require all covered sources to reduce their emissions to a certain level. And it chooses that level by determining the 'maximum degree of reduction' it considers 'achievable' in practice by using the best existing technologies and methods."[206]

In contrast to the "national *emission* standards" promulgated under CAA Section 112 that are focused on reducing HAP emissions to the maximum extent possible, Section 111 requires EPA to promulgate "standards of *performance*," which may also have the effect of reducing emissions, but are focused on only those reductions achievable through emissions reductions systems that are adequately demonstrated. Thus, unlike NESHAPs under which emissions reduction limits must be maximized and continuous, emissions limits under NSPS need only be continuous if continuous compliance irrespective of SSM is "achievable" based on application of the best system of emission reduction adequately demonstrated. This distinction has long been recognized by EPA as evidence by the fact that EPA's general NSPS provisions allow for SSM deviations.

As applicable here, SSM provisions should remain in the revised NSPS standards only if compliance with limits is demonstrated to be achievable through start-up, shut down, and malfunction periods.

The majority of EAF steel mill production is a batch process,[207] for which "start-up" and "shut down" are normal parts of operation. Accordingly, "malfunctions" are the relevant "SSM" events that need to be considered for compliance purposes. As EPA recognizes, by definition, malfunctions are "any sudden, infrequent, and not reasonably preventable failure of air pollution control equipment, process equipment, or a process to operate in a normal or usual manner."[208] Though "sudden and infrequent," malfunctions are a natural and foreseeable occurrence with all manufacturing operations. Events such as utility power outages will occur from time to time and are wholly outside of the control of the operator. Likewise, operations may need to be interrupted for safety or other urgent reasons that can affect the functioning of air pollution control equipment and compliance with NSPS standards.

---

[205] *West Virginia v. EPA*, 597 U.S. __, slip op. at 3 (June 30, 2022)(citing CAA Section 112(b)(2)).

[206] *Id.* at 3-4.

[207] Consteel and similar continuous scrap feed EAF steel production processes are an exception to the traditional "batch" process.

[208] 40 C.F.R. § 60.2.

If the SSM exemption is eliminated, "malfunction" events outside of the control of the operator must be recognized and accounted for as part of the rulemaking process to avoid unnecessary enforcement activity arising out of these events. We recognize that the D.C. Circuit has rejected explicit regulatory affirmative defenses and upheld EPA's approach of utilizing the Agency's "enforcement discretion to address exceedances of emission limits that may be caused by such uncertain, unpredictable events, on a case-by-case basis."[209] However, the D.C. Circuit did recognize that, while not mandatory, EPA has discretion to adopt a work practice standard under CAA Section 111(h) to address periods of malfunction.[210] In addition, in exercising its court-sanctioned enforcement discretion EPA may identify factors that should be considered in evaluating potential non-compliance with emission limits due to malfunction events.

We urge EPA to be proactive in addressing the inevitable instances when, due to conditions outside of the control of the operator, exceedances of the NSPS emission limits may occur. A work practice standard under Section 111(h) could include the following :

- Notification within a prescribed period of time to the appropriate regulatory after a malfunction event;
- Documentation that any excess emissions were caused by a sudden, short, infrequent, and unavoidable failure of air pollution control and monitoring equipment, process equipment, or a process to operate in a normal or usual manner;
- Explanation that the malfunction event was not part of a recurring pattern indicative of inadequate design, operation, or maintenance;
- Repair of the equipment as expeditiously as possible when the applicable emission limitations are exceeded;
- Showing that steps were taken to minimize the frequency, amount, and duration of the excess emissions to the extent practicable;
- Showing that all reasonable steps were taken to minimize the impact of the excess emissions on ambient air quality, the environment, and human health.

In addition, as part of guidance accompanying the final rule, EPA should specify, at minimum, "malfunction" events that will qualify for a work practice standard or the EPA enforcement discretion. These should include:

- Utility outages/power interruptions

[209] *U.S. Sugar Corp. v. EPA*, 830 F.3d 579, 606–610 (D.C. Cir. 2016).

[210] *Id.*

- Safety requirements
- Unpredictable material failures
- Severe weather
- Other events beyond the control of the operator.

Explicitly recognizing these more obvious "malfunction" events in a work practice standard or guidance will help avoid prolonged and expensive debates over what is "reasonably preventable," and provide facilities with greater assurance of how to comply during such events. Absent such a provision, facilities are left exposed, at minimum, to defending alleged violations for events over which they have no control. Such an approach is an appropriate exercise of EPA's discretion as provided by the D.C. Circuit.

D. EPA's Inclusion of the Definition of Modification in the Applicability Sections is Unnecessary and Potentially Contradictory

In the applicability section for Subparts AA, AAa and AAb, EPA has proposed to include the definition of "modification" taken directly from 40 C.F.R. § 60.2. It is unclear why EPA has chosen to do so, since the reason to have a defined term is so you do not need to restate the definition every time the term is used. In addition, EPA has chosen to restate only the definition of "modification" in this section, even though the terms "construction" and "affected facility" as used in this section are also defined terms in the General Provisions of Part 60. Therefore, EPA's intent in only restating the definition of "modification" is perplexing. More importantly, however, is the fact that the term "modification" is not only defined in 40 C.F.R. § 60.2, but also is substantively explained in 40 C.F.R. § 60.14. Certainly, restating just the definition of "modification" and not also citing to Section 60.14 can in no way eliminate the applicability of Section 60.14 as it relates to EAFs. However, EPA's odd approach with this proposed edit raises this potential contradictory circumstance. As such, the Steel Associations request that EPA either remove this proposed edit from the applicability sections, or add a reference to Section 60.14.

IX. CONCLUSION

The Steel Associations appreciate the opportunity to provide these comments in response to EPA's proposed NSPS Revisions for EAF steel manufacturing. In light of the foregoing comments, we urge the Agency to revise the proposed new Subpart AAb and reconsider the proposed retroactive changes to Subparts AA and AA. If you have any questions or would like to discuss these comments, please do not hesitate to contact us.